SIEMENS

7631

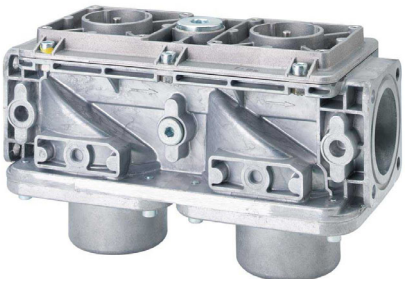

VGD20



VGD40/VGD41

Double gas valves

VGD2...
VGD4...

- **Class A double gas valve for integration into gas trains**
- **Safety shutoff valves conforming to EN 161 in connection with SKPx5 actuators**
- **Suited for use with gases of gas families I...III**
- **Double gas valves in connection with SKPx5s open slowly and close rapidly**
- **2-port valves of the normally closed type**
- **Sizes 1“... DN 150**
- **The double gas valve must be equipped with 2 actuators**
- **Supplementary Data Sheets on actuators: See *Mechanical design***
- **Models for the USA on request**

The VGD2/VGD4 and this Data Sheet are intended for use by OEMs which integrate the double gas valves in their products!

Use

The VGDs are primarily suitable …
- On gas-fired combustion plant
- In gas trains in connection with forced draft gas burners

The VGD is used as:
- Shutoff valves (in connection with SKP15 actuators)
- Control valves with shutoff feature (in connection with SKP25, SKP55 or SKP75 actuators)

All VGDs can be combined with any type of SKPx5.

Supplementary documentation

Product type	Product name	Type of documentation	Documentation number
AGA40.40	Pilot gas connecting plate	Mounting Instructions	74 319 0244 0
AGA40.41	Pressure switch connecting plate	Mounting Instructions	74 319 0244 0
AGA66	Gasket set (IP54 → IP65)	Mounting Instructions	74 319 0421 0
AGA92	Service replacement set	Mounting Instructions	A5W00002883
QPLx5	Gas pressure switch	Data sheet	N7221
SKPx5	Actuator	Data sheet	N7643

Warning notes



To avoid injury to persons, damage to property or the environment, the following warning notes must be observed!

It is not permitted to open, interfere with or modify the double gas valves!

Any opening of the valve, replacement of parts or modifications to the original product is the user's responsibility and is done at his own risk.

- All activities (mounting, installation and service work, etc.) must be carried out by qualified staff
- Any double gas valves that experience a fall or shock must not be put into operation, as this can adversely affect the safety functions even if they do not exhibit any external signs of damage
- In combination with the valve proving system from other manufacturers, the suitability must be checked individually for the plant
- Unsuitable gases or gas components lead to a loss of the safety shutoff function
- It must not be possible for foreign bodies/particles to enter the VGD, as this could have an adverse effect on the safety shutoff function
- Gases with a concentration of >0.1% in the case of H2S and NH3 are not permitted, nor is condensation. If this is not observed, the safety functions may be impaired

- Ensure that the relevant national safety regulations are complied with
- The SKPx5 can be mounted or replaced while the gas valve is under pressure

Also observe the following Mounting Instructions:

Product type	Product name	Mounting Instructions	
AGA40.40	Pressure switch connecting plate	M7631.2	74 319 0244 0
AGA40.41	Pilot gas connecting plate	M7631.2	74 319 0244 0
AGA66	Gasket set (IP54 → IP65)	M7643.2	74 319 0421 0
AGF10	Flange	M7631/M7646	74 319 0865 0
QPLx5	Gas pressure switch	M7221	74 319 0551 0
VGD	Double gas valve	M7631/M7636	4 319 2072 0
VGD2		M7631	4 319 2343 0
VGD20		M7631.5	A5W00002883
VGD4 for DN40...DN150		M7631.2	74 319 0244 0

- For SKP25: Impulse pipe (pressure feedback) on VGD possible
- For SKP75: The impulse pipe (pressure feedback) must be connected to the gas pipe, downstream from the VGD, observing a distance of at least 3…5 x the diameter of the supply pipe

Gasket/tightness

- Check to make certain that the bolts of the AGF10 are properly tightened and afterwards check to ensure that the gas valve is tight when all components are connected
- The O-rings or flange gaskets must be fitted between the AGF10 and the VGD
- Recommendation in the case of exposure to external moisture: Set of gaskets AGA66 (IP65 kit)

Mounting position

The permissible mounting position of the SKPx5 used must be observed (refer to Data Sheet N7643).

Direction of flow

The gas must flow in the same direction as the arrow on the VGD.

Function

The VGD is normally closed and opens when the SKPx5 opens.
It is recommended to mount an SKPx5.xx1xx to notify the CLOSED position of the associated VGD.

VGD20
(not for VGD20.xxxxY)

- Mount the electrohydraulic SKP15 on the inlet side and the SKPx5 with integrated controller (SKP25, SKP55 or SKP75) preferably on the outlet side of the VGD
- When mounting the VGD20 in the gas train, 2 AGF10 flanges are required
- When replacing a VGD20 on existing AGF10s, new O-rings must be mounted
- When replacing a VGD20 on the existing AGA41 / AGA51 flanges (old flange series), new O-rings and longer screws (M8 x 35) must be mounted (AGA92)
- To prevent cuttings from falling into the VGD, first mount the AGF10 on the pipes. Then clean the parts before installing the VGD20

Applied directives:

- Gas Appliances Regulation (EU) EU/2016/426

Note!
VGD20 / VGD4 only in connection with SKPx5, refer to data sheet N7643.

Compliance with the regulations of the applied directives is verified by the adherence to the following standards / regulations:

- Safety and control devices for burners and appliances burning gaseous and/or liquid fuels – General requirements DIN EN 13611

The relevant valid edition of the standards can be found in the declaration of conformity!

EAC Conformity mark (Eurasian Conformity mark)

ISO 9001:2015
ISO 14001:2015
OHSAS 18001:2007

China RoHS
Hazardous substances table:
http://www.siemens.com/download?A6V10883536

Standards and certificates (cont´d)

Approvals in combination with the SKPx5

Type	DVGW	AGA
VGD20.403	●	●
VGD20.503	●	●
VGD20.2511	●	---
VGD20.3211	●	---
VGD20.4011	●	---
VGD20.4011A **)	●	---
VGD20.4011C	●	---
VGD20.4011Y	●	---
VGD20.5011	●	---
VGD20.5011A **)	●	---
VGD20.5011C	●	---
VGD20.5011Y	●	---
VGD40.040	●	●
VGD40.040L	●	---
VGD40.050	●	●
VGD40.050L	●	---
VGD40.065	●	●
VGD40.065L	●	---
VGD40.065J	●	---
VGD40.080	●	●
VGD40.080L	●	---
VGD40.080J	●	---
VGD40.100	●	●
VGD40.100L	●	---
VGD40.125	●	●
VGD40.125L	●	---
VGD40.150	●	●
VGD40.150L	●	---
VGD41.040	●	---
VGD41.050	●	---
VGD41.065	●	---
VGD41.080	●	---
VGD41.100	●	---
VGD41.125	●	---
VGD41.150	●	---

**) Not yet available

Life cycle

The combination double gas valve and actuator have a designed lifetime* of

Nominal sizes	Burner startup cycles
≤25 DN	200.000
25...80 DN	100.000
80...150 DN	50.000

under use of gases to EN 437 (or DVGW specification G260).

This lifetime is based on the endurance tests in the standard EN 161.
A summary of the conditions has been published by the European Control Manufacturers Association (Afecor) (www.afecor.org).

The designed lifetime is based on use of the double gas valve and actuator according to the manufacturer's data sheet. After reaching the designed lifetime in terms of the number of burner startup cycles, or after the corresponding usage time, the double gas valve and actuator must be checked and/or replaced by authorized personnel.

The criteria set out in EN 161 are applicable when testing the tightness.
This test can be omitted if a valve proving system is in place.

* The designed lifetime is not the warranty time specified in the Terms of Delivery.

The use in gases beyond the scope of EN 437 / G260, such as G262, can result in a limited lifetime.

Service notes

- Each time a gas valve has been replaced, check to ensure that the VGD operates correctly and that it is tight both internally and externally
- The double gas valves supplied by Siemens may **only** be repaired by Siemens Repair Centers



Caution!
The QPLx5 also has to be replaced when replacing a valve.
It is recommended to replace the QPLx5 after over 50,000 cycles or a service life of 10 years due to the designed lifetime for gas pressure switches according to AFECOR. It is not recommended to reinstall these, even if the seals on the valve have been replaced.

Disposal notes

Local and currently valid legislation must be observed.

Strainer

A strainer made of stainless steel is fitted in the inlet and protects the VGD, seat, and disc – as well as downstream devices – against dirt.

AGF10 to VGD2

The AGF10s have an 1/8" sealing plug. They are internally threaded and supplied as separate items together with the necessary accessories, such as bolts, nuts, and gaskets. All of the connection thread dimensions for the AGF10 can be optionally fitted to a VGD2. Each VGD requires 2 AGF10s.

VGD2

Sectional view of VGD2

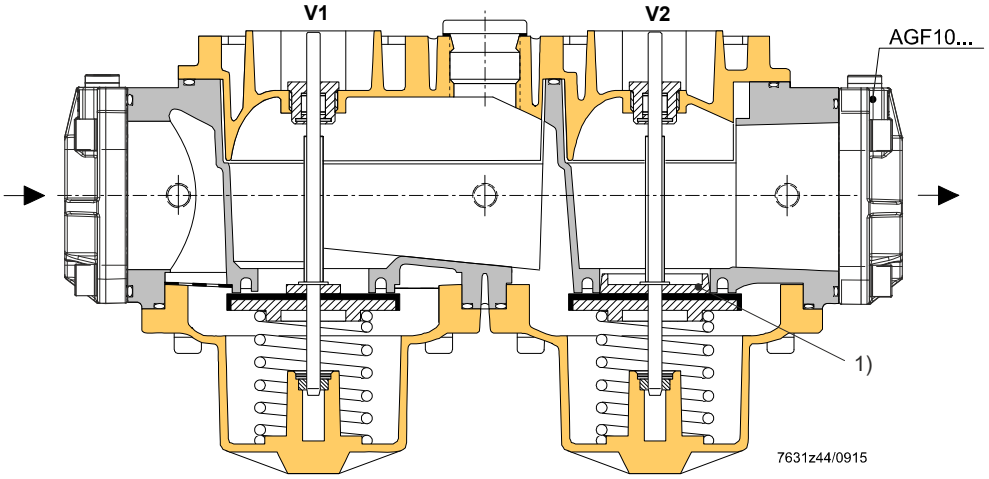

1) Profile not required with VGD20.xxxxY

Application example

VGD2 with SKP15 (mounted on **V1**) and SKP75 (mounted on **V2**)
Shown without AGF10

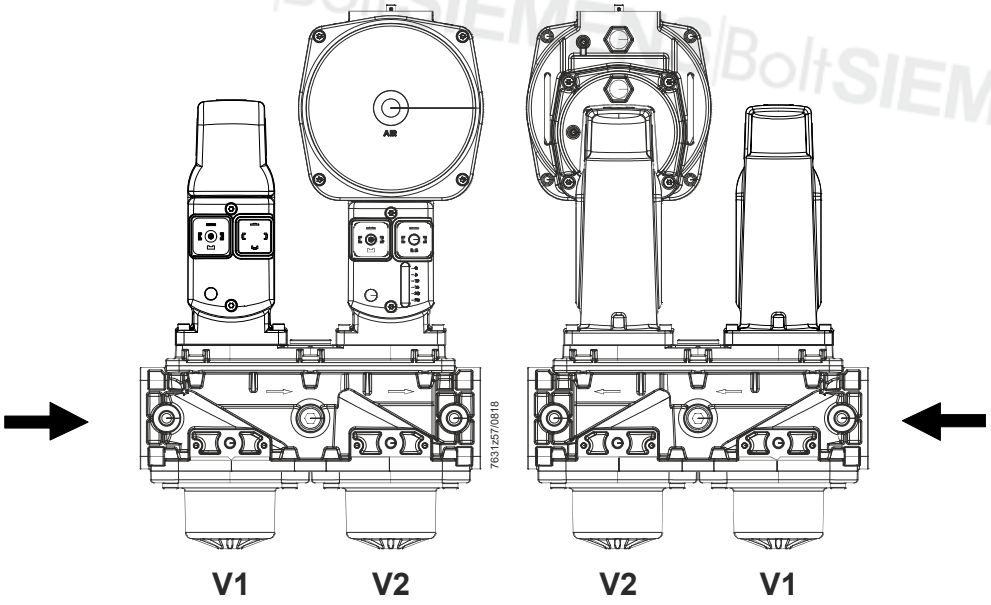

VGD4

The VGD4s are double-seat poppet valves. The ¼" impulse connection on the AGA40.40 for valve V1, or the impulse connection on the VGD outlet flange for valve **V1** or **V2**, can be connected to the impulse connection of the mounted constant pressure governor SKP25.

Closing springs

Each double seat uses one pair of springs. The spring forces act separately as closing forces on the individual valve seats.

AGA40.41

The AGA40.41 ① facilitates the attachment of a number of commercially available pressure switches or valve proving devices. The AGA40.40 ② and AGA40.41 can be fitted on either side of the valve.

VGD40

Sectional view of VGD40

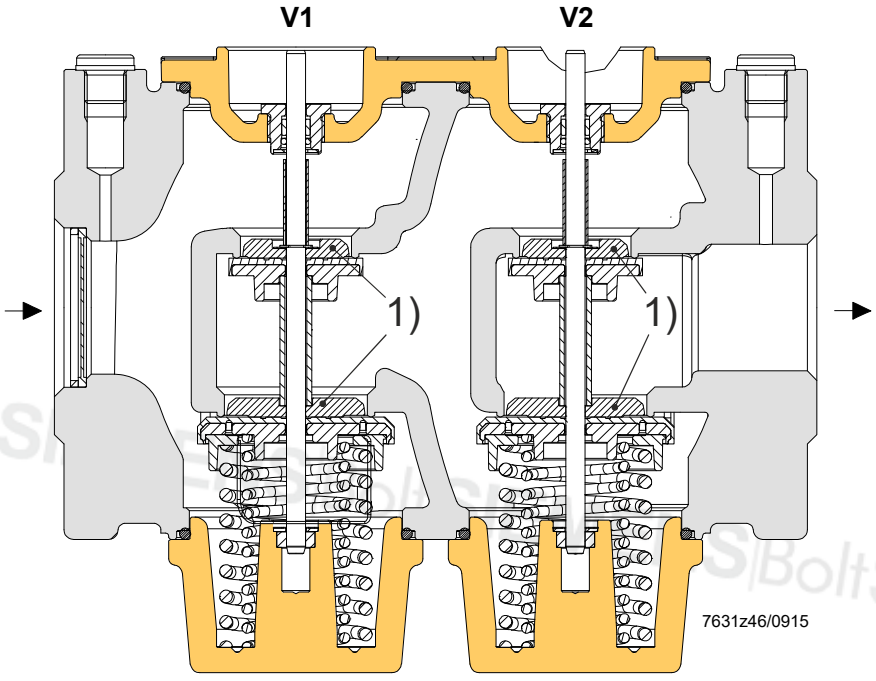

1) Profile not required with VGD41.xxxxY

Application example

VGD40.080 with SKP15 (mounted on valve **V1**) and SKP25 (mounted on valve **V2**).

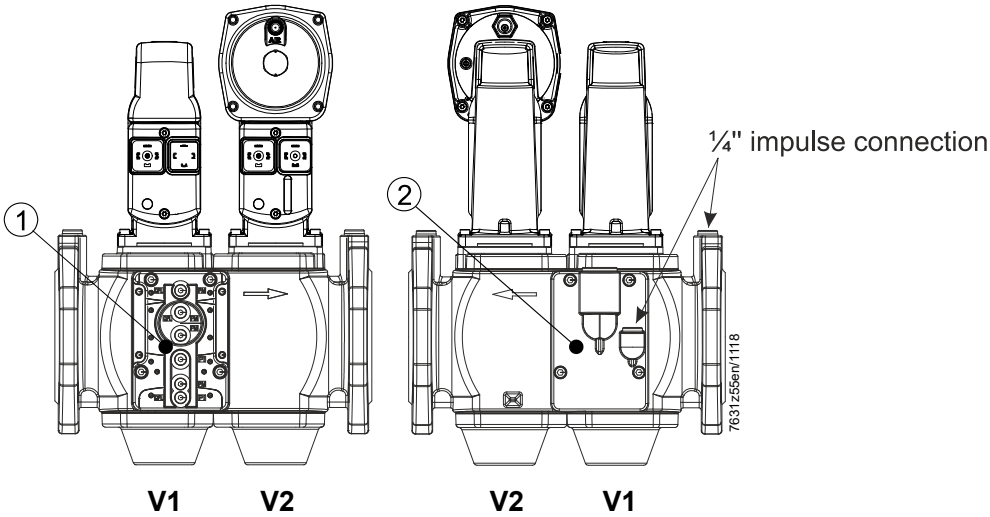

SKPx5

The VGDs can be combined with the following SKPx5s:

Product no.	Data Sheet	Function
SKP15	N7643	ON/OFF
SKP25	N7643	ON/OFF with constant pressure control/zero pressure control
SKP25.7 with SQS37	N7643	ON/OFF with pressure control, predefined setpoint adjustable via electrical signal
SKP55	N7643	ON/OFF with differential pressure control, signal input → differential pressure
SKP75	N7643	ON/OFF with fuel / air ratio control, signal input → static pressure

SIEMENS|BoltSIEMENS|BoltSIEMENS|BoltSIEMENS|BoltSIEMEN

Type summary (other types of valves on request)

VGD20

Nominal size	Flow rate at Δp = 1 kPa m³/h air	With 3 internally threaded connections		With 11 internally threaded connections		With 11 internally threaded connections Without valve seat profiling (V2) for faster gas permeability		With 11 internally threaded connections With specific valve seat profiling (V2)	
		Article no.	Type	Article no.	Type	Article no.	Type	Article no.	Type
1"	25	---	---	**S55590-G103-A100**	**VGD20.2511**	---	---	---	---
1 ¼"	46	---	---	**S55590-G101-A100**	**VGD20.3211**	---	---	---	---
1 ½"	85	**BPZ:VGD20.403**	**VGD20.403**	**BPZ:VGD20.4011**	**VGD20.4011**	**BPZ:VGD20.4011Y**	**VGD20.4011Y**	**S55590-G105-A100**	**VGD20.4011C**
1 ½"	85	---	---	**BPZ:VGD20.4011A** *)	**VGD20.4011A** *)	---	---	---	---
2"	100	**BPZ:VGD20.503**	**VGD20.503**	**BPZ:VGD20.5011**	**VGD20.5011**	**BPZ:VGD20.5011Y**	**VGD20.5011Y**	**S55590-G106-A100**	**VGD20.5011C**
2"	100	---	---	**BPZ:VGD20.5011A** *)	**VGD20.5011A** *)	---	---	---	---

*) Not yet available

VGD40

DN	Flow rate at Δp = 1 kPa m³/h air					VGD40.xxxL with inverted position of mounting plates (see *Dimensions*)	
		Article no.	Type	Article no.	Type	Article no.	Type
40	85	**BPZ:VGD40.040**	**VGD40.040**	---	---	**BPZ:VGD40.040L** *)	**VGD40.040L** *)
50	100	**BPZ:VGD40.050**	**VGD40.050**	---	---	**BPZ:VGD40.050L**	**VGD40.050L**
65	160	**BPZ:VGD40.065**	**VGD40.065**	**BPZ:VGD40.065J**	**VGD40.065J**	**BPZ:VGD40.065L**	**VGD40.065L**
80	250	**BPZ:VGD40.080**	**VGD40.080**	**BPZ:VGD40.080J**	**VGD40.080J**	**BPZ:VGD40.080L**	**VGD40.080L**
100	400	**BPZ:VGD40.100**	**VGD40.100**	---	---	**BPZ:VGD40.100L**	**VGD40.100L**
125	630	**BPZ:VGD40.125**	**VGD40.125**	---	---	**BPZ:VGD40.125L**	**VGD40.125L**
150	800	**BPZ:VGD40.150**	**VGD40.150**	---	---	**BPZ:VGD40.150L**	**VGD40.150L**

*) On request

SIEMENS|BoltSIEMENS|BoltSIEMENS|BoltSIEMEN

Type summary (other types of valves on request) (continued)

VGD41

DN	Flow rate at Δp = 1 kPa m³/h air	VGD41.xxx with AGA40.41 on both sides, refer to *Dimensions* VGD41.xxx without internal valve seat profile for faster gas permeability	
		Article no.	Type
40	85	**BPZ:VGD41.040**	**VGD41.040**
50	100	**BPZ:VGD41.050**	**VGD41.050**
65	160	**BPZ:VGD41.065**	**VGD41.065**
80	250	**BPZ:VGD41.080**	**VGD41.080**
100	400	**BPZ:VGD41.100**	**VGD41.100**
125	630	**BPZ:VGD41.125**	**VGD41.125**
150	800	**BPZ:VGD41.150** *)	**VGD41.150** *)

*) On request

SIEMENS|BoltSIEMENS|BoltSIEMENS|BoltS

When ordering, please quote the product type of the double gas valve.

The actuators, double gas valve, and flanges (VGD2 only) are supplied as single packs.

Example: VGD2
Double gas valve 2" with 2 flanges and 2 actuators
1 VGD20.503
2 x SKPx5 units
2 AGF10.50

Example: VGD4
Double gas valve DN80 with 2 actuators
1 VGD40.080
2 x SKPx5 units

The lateral AGA40.4x units (pilot gas connection and pressure switch connection) are already included in the scope of delivery and ready fitted.

SIEMENS|BoltSIEMENS|BoltSIEMENS|BoltS

Accessories (to be ordered separately)



AGF10 flange

- Flange for VGD2 connection
- Order flanges individually
- Flanges can be combined with the VGD2 as desired

The following flange sizes and flange threads are available:

Flange		Nominal size (RP)	Length in mm
Article no.	Type		
BPZ:AGF10.15	**AGF10.15**	½"	26
BPZ:AGF10.20	**AGF10.20**	¾"	26
BPZ:AGF10.25	**AGF10.25**	1"	26
BPZ:AGF10.32	**AGF10.32**	1 ¼"	26
BPZ:AGF10.40	**AGF10.40**	1 ½"	26
BPZ:AGF10.50	**AGF10.50**	2"	30



Pilot gas connecting plate for VGD40 **AGA40.40**

Article no.: **BPZ:AGA40.40**

- Spare part (kit incl. grommet and gaskets)
- Refer to Mounting Instructions M7631.2 (74 319 0244 0)



Pressure switch connecting plate for VGD40 **AGA40.41**

Article no.: **BPZ:AGA40.41**

- Spare part (kit incl. gaskets)
- Refer to Mounting Instructions M7631.2 (74 319 0244 0)

Accessories (to be ordered separately) (Continued)



Double nipple (e.g. connection of QPL25)
Double nipple (1/8" to 1/4") required on-site for mounting the QPL25

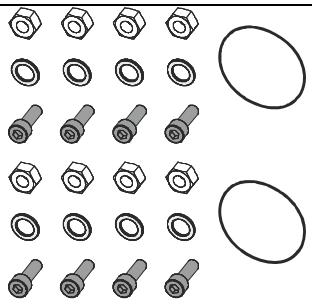

Service replacement kit for VGD20 **AGA92**
Article no. **S55851-Z901-A100**

- Required when replacing the VGD20 and retaining the old flanges AGA41 / AGA51
- Screw dimensions M8 x 35
- Consisting of:
  8 screws, 8 washer, 8 nuts, 2 O-rings

See Mounting Instructions A5W00002883



Manually operated **AGA61**
Article no. **BPZ:AGA61**



Gasket set for SKPx5 **AGA66**
Article no. **BPZ:AGA66**

- Between SKPx5 and VGD
- For improving the degree of protection from IP54 to IP65
- Refer to Mounting Instructions M7643.2 (74 319 0421 0)
- Recommended for installation in humid environments



QPL15 pressure switch for the VGD

- For monitoring the gas pressure or air pressure
- O-ring connection

Refer to Data Sheet N7221 and Mounting Instructions M7221 (74 319 0551 0)



QPL25 pressure switch for the VGD

- For monitoring the gas pressure or air pressure
- ¼" connection

Refer to Data Sheet N7221 and Mounting Instructions M7221 (74 319 0551 0)

Technical data

General valve data	Valve class in combination with SKPx5	A conforming to EN 161 (except with SAX31)
	Group	2 (EN 161)
	Perm. medium temperature	-15...60 °C
	Weight - VGD2 - VGD4	 Approx. 3.2 kg See *Dimensions*
	Connecting flanges for VGD4	PN 16 to ISO 7005-2
	Required flow rate	See *Flow chart*
	Mounting position	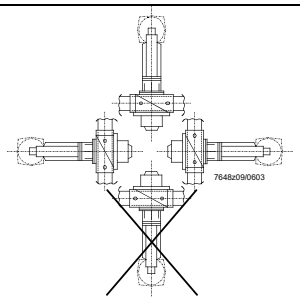 See *Mounting notes*
	Operating pressure	See *Type summary*
	Permissible gas pressure against the direction of flow • VGD20 • VGD40 • VGD41	 15 kPa 30 kPa 30 kPa
	Types of gas • VGD2 / VGD4 • VGD4	 Suited for use with gases of gas families I...III and air Suitable for gases up to max. 0.1 Vol.-% H2S, dry
	Strainer	Built in (mesh size 0.9 mm)
	Materials	AlSi10Mg to DIN 1706
Environmental conditions	**Storage**	DIN EN 60721-3-1
	Climatic conditions	Class 1K3
	Mechanical conditions	Class 1M2
	Temperature range	-20...60 °C
	Humidity	<95% r.h.
	Transport	DIN EN 60721-3-2
	Climatic conditions	Class 2K2
	Mechanical conditions	Class 2M2
	Temperature range	-15...60 °C
	Humidity	<95% r.h.
	Operation	DIN EN 60721-3-3
	Climatic conditions	Class 3K5
	Mechanical conditions	Class 3M2
	Temperature range	-10...60 °C
	Humidity	<95% r.h.
	Installation altitude	Max. 2,000 m above sea level

Warning!
Condensation must not be allowed to form in the valve!
If this is not observed, there is a risk of safety functions being impaired.

Permissible gas pressures/volumes

Type	Permissible maximum operating pressure (dynamic pressure) kPa	Volume between **V1**/**V2** (liters)
VGD20.2xx	150	0.75
VGD20.3xx	150	0.75
VGD20.4xx	150	0.75
VGD20.5xx	150	0.8
VGD40.040	100	0.8
VGD40.050	100	0.8
VGD40.065	70	1.3
VGD40.065J	70	1.3
VGD40.080	70	1.5
VGD40.080J	70	1.5
VGD40.100	70	3
VGD40.125	70	5.2
VGD40.150	70	8.7
VGD41.040	100	0.8
VGD41.050	100	0.8
VGD41.065	70	1.3
VGD41.080	70	1.5
VGD41.100	70	3
VGD41.125	70	5.2
VGD41.150	70	8.7

VGD40

The VGD40s are designed to withstand gas pressures up to 150 kPa in burner standby mode.
This pressure load is not present during normal operation, but only if the upstream pressure reducing device fails.
At a pressure of 150 kPa, the VGD40 remains safely closed or will safely close.
If the maximum permissible operating pressure is exceeded, a valve shutdown must be initiated.
The proper functioning and outer tightness of the valve are not affected.

Note:

Owing to the internal design of the VGD40, increasing inlet pressure causes the valve to close (class “A” conforming to EN 161).

This means that safety shutoff or venting equipment that – in addition to the supply pressure regulator – are normally used for protecting the gas fitting on the burner (on the gas consumption equipment) are no longer required if the following 2 conditions are satisfied:

- If, in the event the supply pressure regulator upstream of the valve fails, 150 kPa at the inlet of the VGD40 are not exceeded and,
- in the event the permissible operating pressure of the VGD40 is exceeded (DN65...DN150:
  70 kPa or DN40...DN50: 100 kPa), a shutoff device (e.g., gas pressure switch) causes the VGD40 to close.

Example: Possibilities of fitting the QPL15 with O-ring to the VGD20.xx11

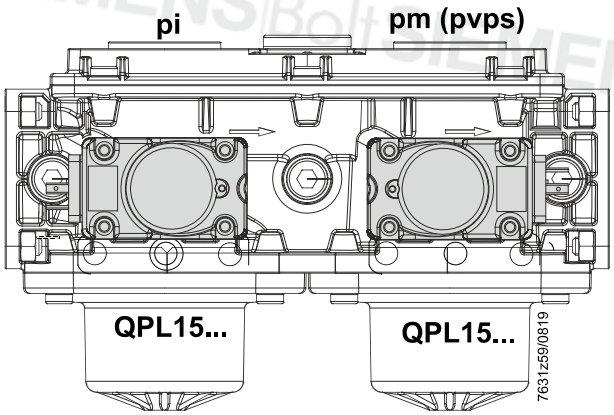

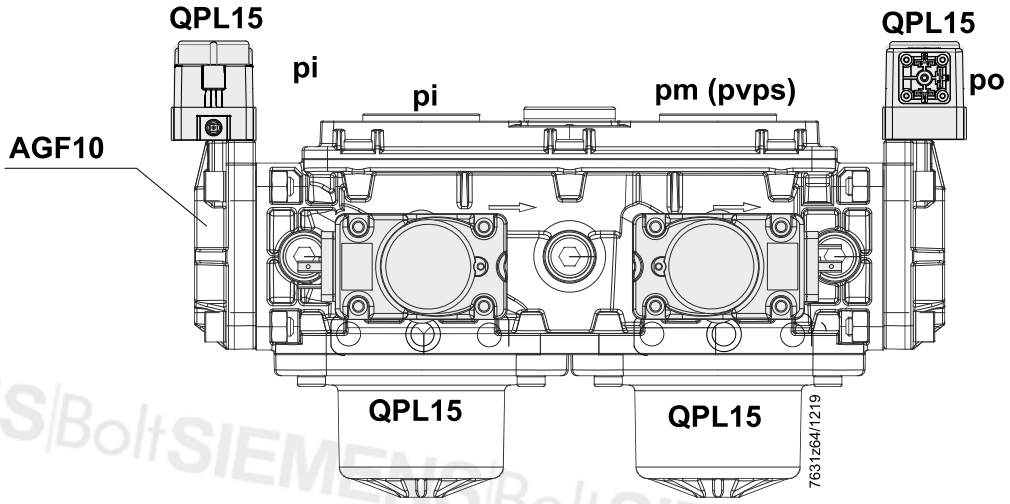

Example: Possibilities of fitting the QPL25 with nipple to the VGD20.xx3 Rp¼"...1/8"

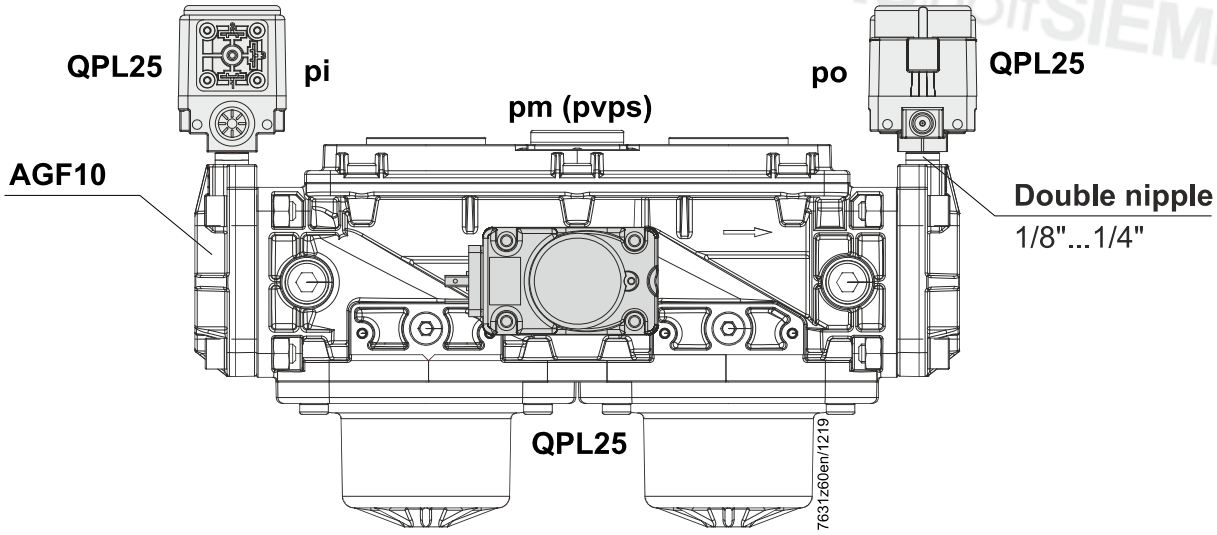

Example: Possibilities of fitting the QPLx5 to the VGD4

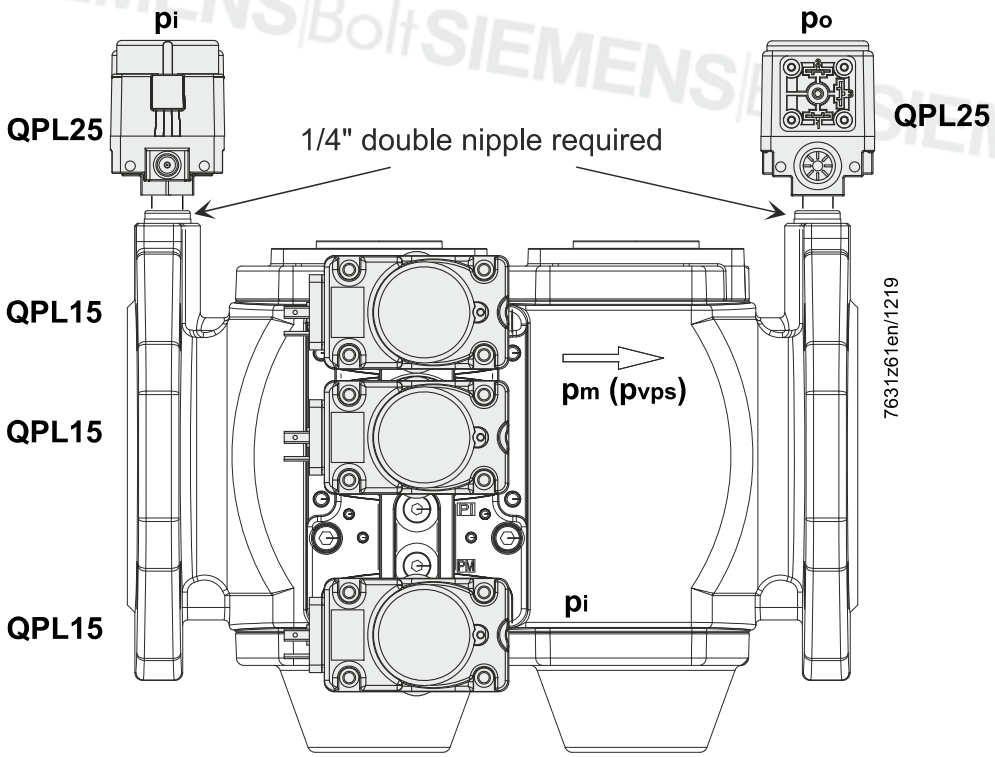

Legend

p_i =	inlet pressure
p_o =	outlet pressure
p_m =	mid-chamber pressure
p_{vps} =	valve proving check

Example: Combinations of VGD40/VGD41 and actuator (here with SKP15 and SKP25)

The pressure switch plate ① facilitates the attachment of a number of commercially available pressure switches or valve proving devices.
The pilot gas flange ② and pressure switch plate can be fitted on either side of the valve.

Flow chart of VGD (only for fully open VGDs)

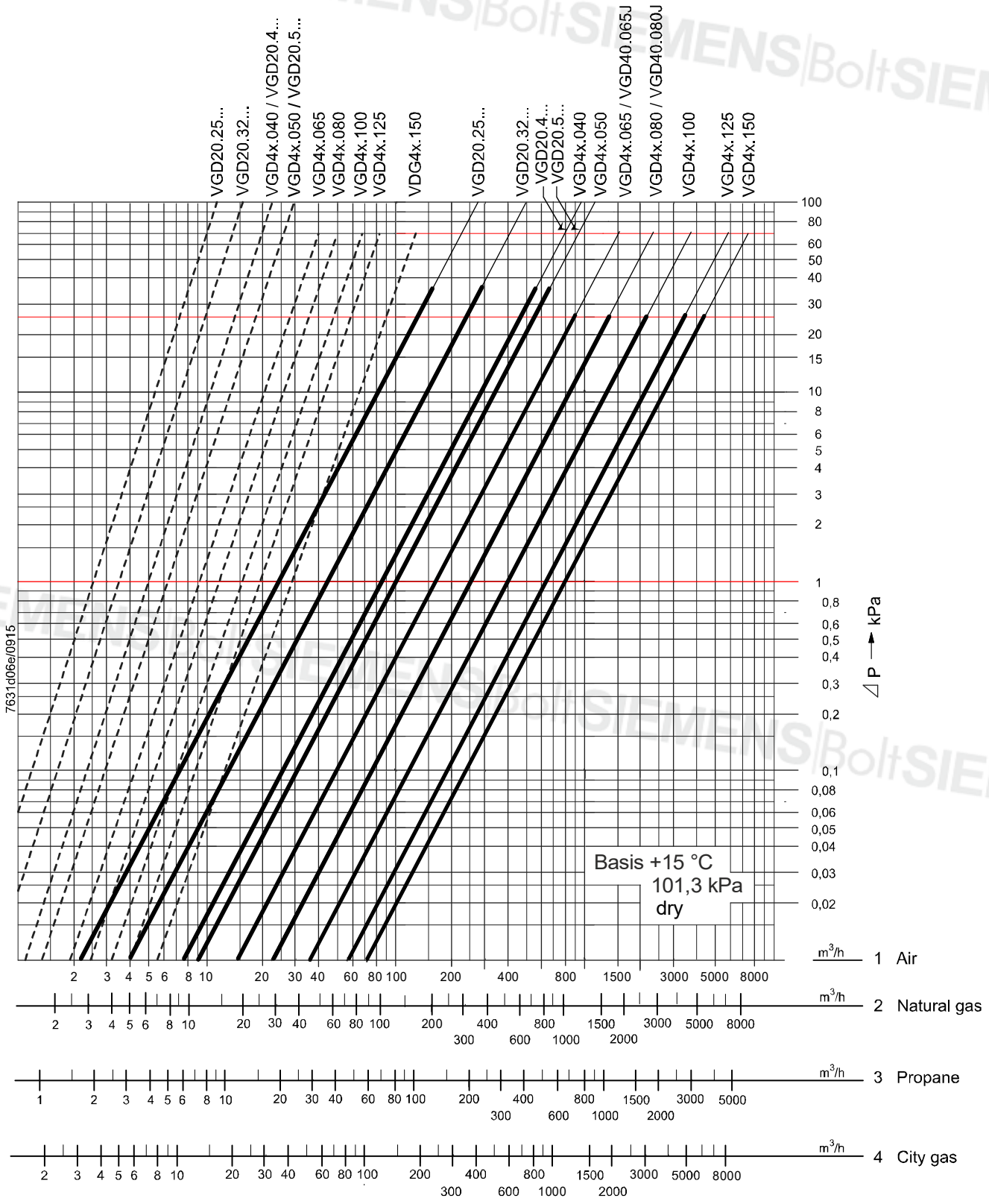

Legend:

..... Minimum flow characteristic

——— Maximum flow characteristic (for fully open VGDs)

Determination of pressure drop for gases with a density ratio (dv) other than that of the chart scales above:

Required variables

p(Gas) Gas density in kg/m³
V(Gas) Gas volume in m³/h

Procedure

- Calculate of the gas density ratio [dv(gas)]:

$$dv(Gas) = \frac{\text{Density (gas) in kg/m}^3}{\text{1.22 kg/m}^3 \text{ (= air density)}}$$

- Determine the air volume [V(air)] that produces the same pressure drop (Δp) as the gas volume [V(gas)]:

$$V(air) = \frac{\text{V(gas) in m}^3\text{/h}}{\sqrt{dv(Gas)}}$$

- Determine the gas pressure drop (Δp) with the help of the flow chart, based on the calculated air volume [V(air)] on the chart scale.

Operation beyond the range confined by the bold characteristics can lead to flow noise!

Attention!

- For applications with a large modulation range, select the smallest possible nominal valve size, see SKPx5 data sheet N7643.
- If the gas pressure exceeds the maximum permissible operating pressure, reduce it with a pressure regulator installed upstream of the valve
- The pressure drop (lines of maximum flow) is based on a fully open VGD

Conversion of the air volume to a corresponding gas volume (natural gas)

Basis of scale

Abscissa	Medium Volumetric flow (QG) in m³/h	Density ratio (dv) to air	Conversion factor $f = \sqrt{\frac{1}{d_v}}$
1	Air	1	1
2	Natural gas	0.61	1.28
3	Propane	1.562	0.8
4	Town gas	0.46	1.47

Conversion to air (m³/h) from other types of gases:

$QL = \frac{QG}{f}$

QL = amount of air m³/h producing the same pressure drop as **QG**

Example: Recommended working range (only for fully open VGDs)

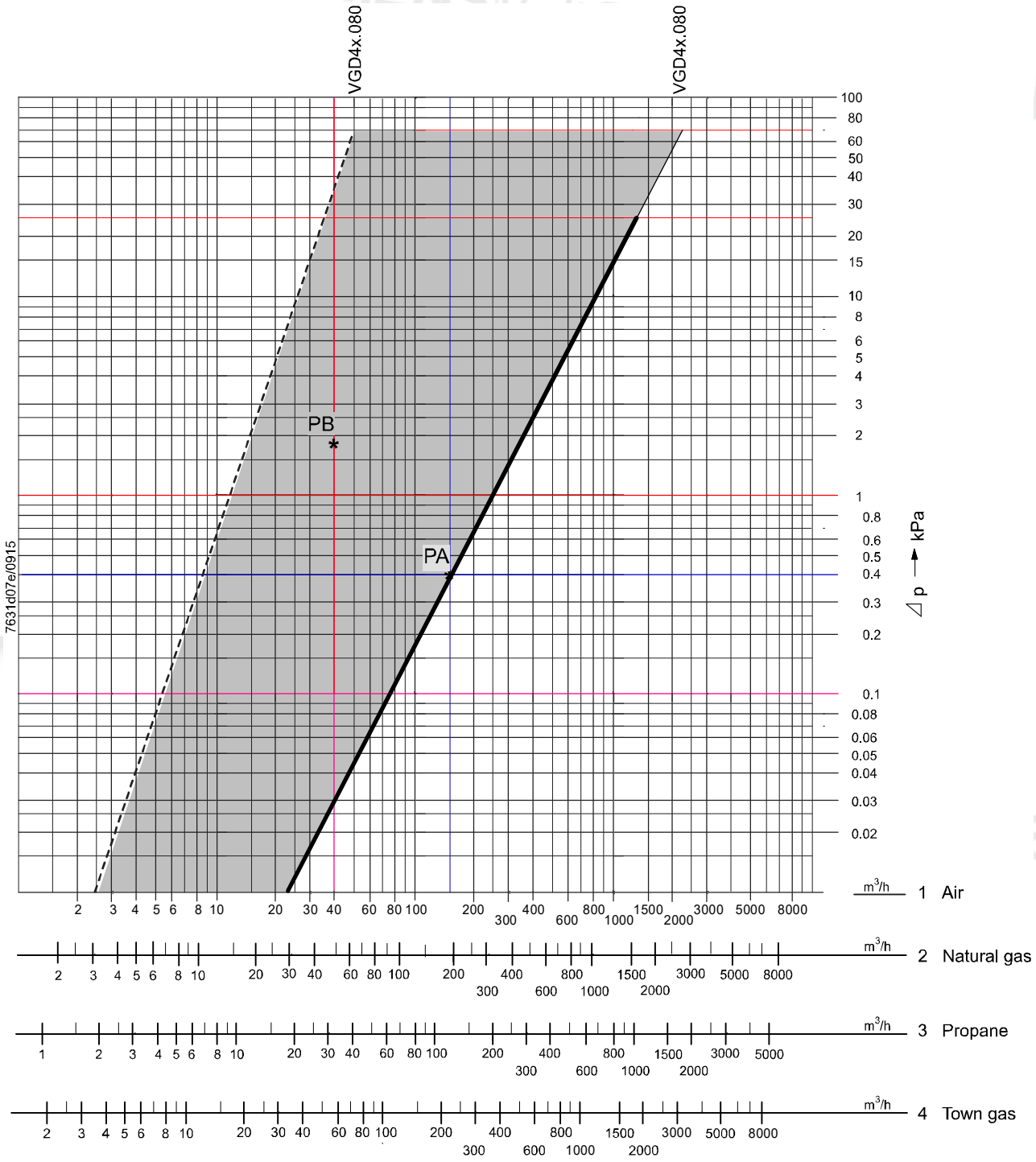

Legend

·····	Minimum flow characteristic (can vary, depending of the quality of the pressure test points)
——	Maximum flow characteristic (for fully open VGDs)
PA	Working point
PB	Working point

For points **PA** / **PB**, refer to the *Sizing example* chapter.

Sizing example

Simplified example based on the above sizing chart: VGD with SKP75.

Prerequisite	Burner gas outlet toward the combustion chamber
Simplified example: Constant combustion chamber pressure	= 0 kPa
Required control ratio	RV = 4:1
Gas inlet pressure	2 kPa

1. **High-fire** → Point **PA** in the highlighted area
   Burner pressure at nominal load 1.6 kPa
   Volumetric flow at nominal load 200 m³/h natural gas, corresponding to 156 m³/h air
   - ΔpVx at nominal load 2.0 – 1.6 = 0.4 kPa
   Point **PA** must be on or to the left of the line representing the maximum flow characteristic
2. **Low-fire** → Point **PB** in the highlighted area

$$PGmin = \frac{PGmax}{RV^2} = \frac{1.6\ kPa}{16} = 0.1\ kPa\ (\Delta p\ chart = 2.0 - 0.1 = 1.9\ kPa$$

$$VGmin = \frac{VGmax}{RV} = \frac{200\ m^3/h}{4} = 50\ m^3/h\ corresponding\ to\ h = 39\ m^3/h\ air$$

– Selected valve size VGD40.080
Point **PB** must be on or to the right of the line representing the minimum flow characteristic.

Dimensions (not to scale)

Dimensions in mm

Note!
The VGD20s may only be mounted in conjunction with AGF10s.

VGD20.xx3 with AGF10

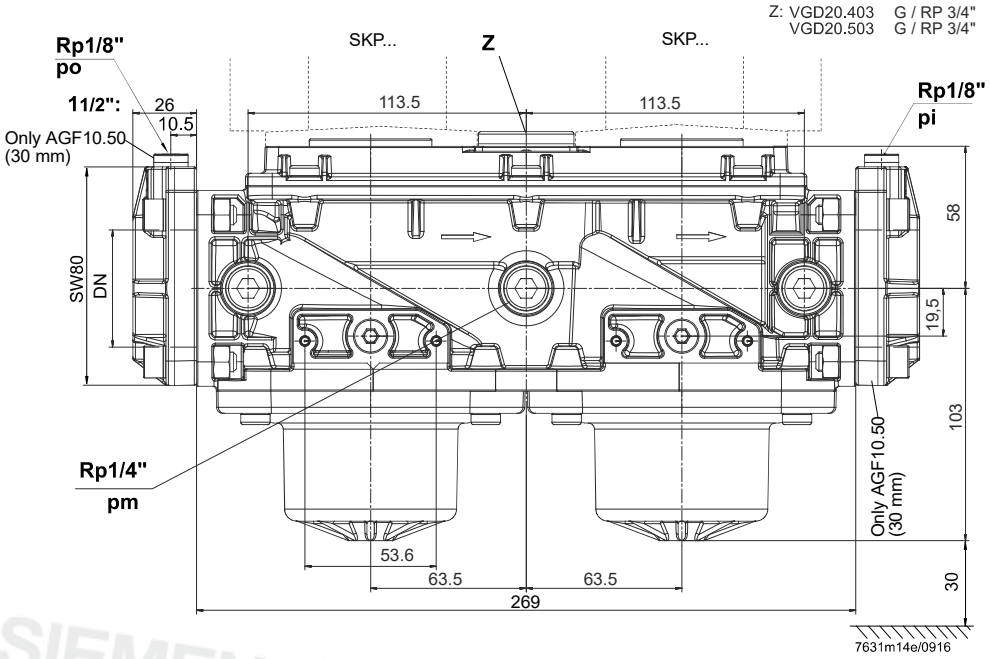

VGD20.xx11 with AGF10 (for dimensions, refer to VGD20.403/VGD20.503)

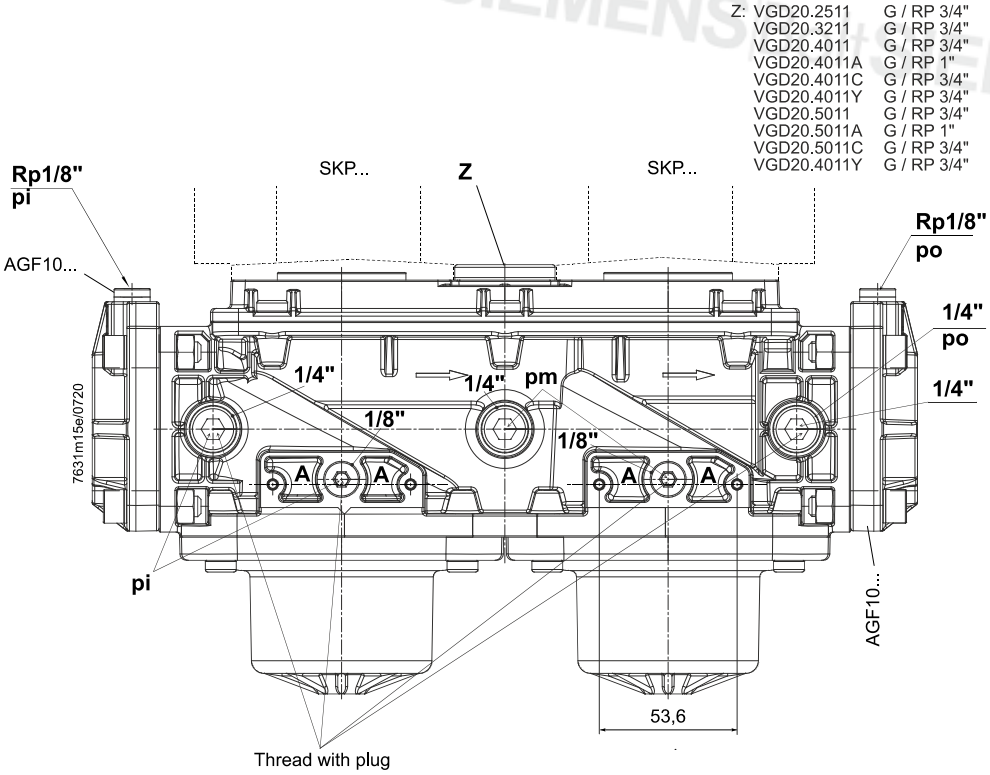

Note!
A = hole for fitting the pressure switch (cheese-head screw M4 self-tapping)!

(Not to scale)

VGD40/VGD41

Dimensions

VGD40

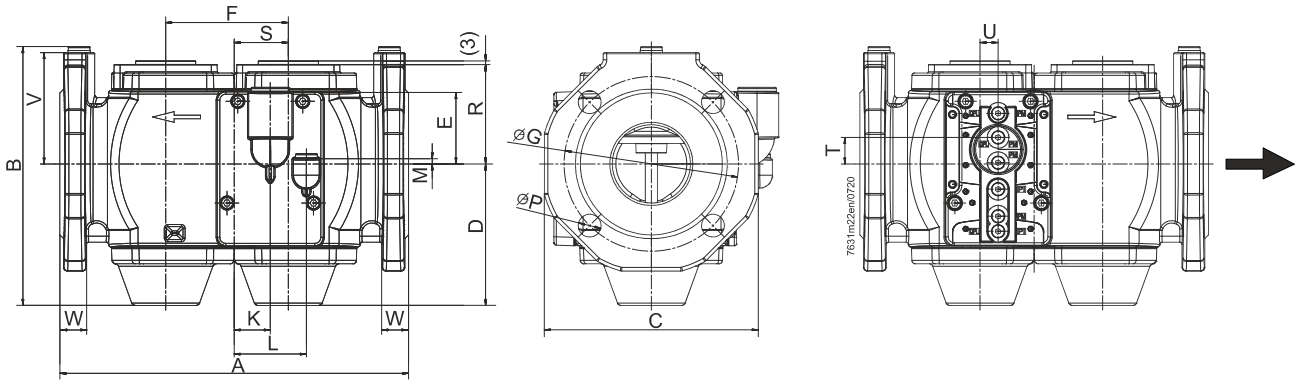

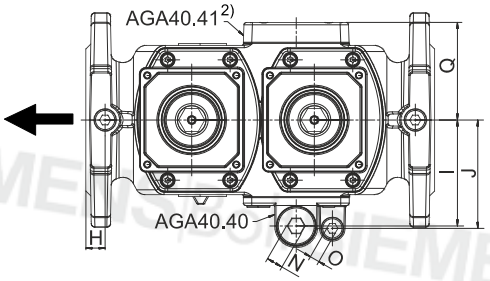

AGA40.41

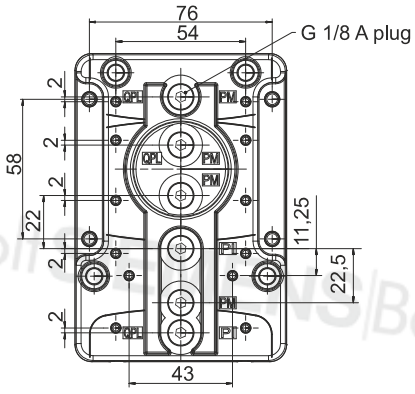

VGD40.xxxL

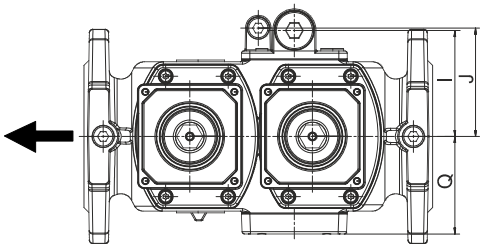

VGD41

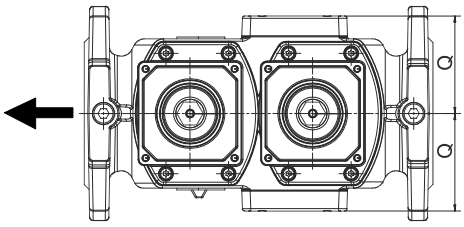

Dimensions (cont´d)

Table of dimensions

Type	DN [1)]	A	B	C	D	E	F	G	H	I	J	K	L	M	N	O	P	Q
VGD4x.040x	40	240	195	168	115	58	88	110	16	77	79	20	50	2	12	6	19	70
VGD4x.050x	50	240	202	175	115	58	88	125	16	77	79	20	50	2	12	6	19	70
VGD4x.065x	65	290	214	195	118	60	102	145	16	88	90	30	60	4	12	6	19	81
VGD40.065J	65	290	215	195	118	60	102	140	16	88	90	30	60	4	12	6	19	81
VGD4x.080x	80	310	236	204	132	54	107	160	16	90	92	30	60	3	12	6	19	88
VGD40.080J	80	310	238	204	132	54	107	150	16	90	92	30	60	3	12	6	19	88
VGD4x.100x	100	350	259	228	145	43	131	180	16	106	108	41	71	13	12	6	19	99
VGD4x.125x	125	400	305	256	175	31	150	210	16	120	122	41	71	25	12	6	19	113
VGD4x.150x	150	480	335	294	188	20	168	240	16	140	143	39	69	36	12	6	23	134

Type	R	S	T	U	V	W	kg
VGD4x.040x	79	44	20	20	75	20	7.0
VGD4x.050x	79	44	20	20	82.5	20	7.2
VGD4x.065x	82	45	22	30	92	22	8.4
VGD40.065J	82	45	22	30	95	22	8.4
VGD4x.080x	92	48	16	30	100	24	9.6
VGD40.080J	92	48	16	30	102	24	9.6
VGD4x.100x	110	59.5	5	41	110	24	12.9
VGD4x.125x	128	69	7	41	125	26	18.2
VGD4x.150x	145	78	18	39	142	26	24.1

1) Flanges to ISO 7005-2
2) VGD41 has an AGA40.41 on both sides and no AGA40.40
3) With the VGD40.xxxL, the mounting position of the two AGA40.4x units is reversed

DN Nominal size, dimensions of connection
R Number of boreholes in the flange

©2020 Siemens AG Smart Infrastructure, Berliner Ring 23, D-76437 Rastatt
Subject to change!