Honeywell | Industrial & Commercial Thermal

krom schroder

Automatic burner control unit IFD 258

Technical Information · GB
6 Edition 03.12l



- For directly ignited burners of unlimited capacity in continuous operation pursuant to EN 746-2
- Immediate fault lock-out or restart following flame failure available as a switchable function
- Flame control with UV sensor or ionization sensor
- Space-saving installation on site with IFD 258..I with integrated ignition
- Display for program status and flame signal intensity

Contents

Automatic burner control unit IFD 258 1
Contents 2
1 Application 4
1.1 Examples of application 5
1.1.1 Forced draught burners 6
1.1.2 Two-stage-controlled burner 7
1.1.3 Modulating-controlled burner 8
2 Certification 9
2.1 EC type-tested and certified 9
2.2 AGA approval 9
2.3 FM approval 9
2.4 CSA approval 9
2.5 Approval for Russia 9
3 Function 10
3.1 Connection diagrams 10
3.1.1 IFD 258 10
3.1.2 IFD 258..I 12
3.2 Program sequence 13
3.3 Animation 15
3.4 Program status and fault messages 16
3.4.1 Reading off the flame signal 17
4 Parameters 18
4.1 Scanning the parameters 18
4.2 Flame control 19
4.2.1 Burner flame signal 19
4.2.2 Switch-off threshold of the flame amplifier 19
4.3 Behaviour during start-up 20
4.3.1 Normal start-up 20
4.3.2 Start-up without flame signal 20
4.3.3 Flame simulation 21
4.4 Behaviour during operation 22
4.4.1 Safety time during operation t_{SB} for V1 and V2 22
4.4.2 Fault lock-out or restart 22
5 Replacement possibilities 24
6 Selection 25
6.4.1 Calculating the safety time t_{SA} 25
6.1 Selection table 26
6.1.1 Type code 26
7 Project planning information 27
7.1 Cable selection 27
7.2 Star electrodes 27
7.3 Purge 28
7.4 Emergency stop in the event of fire or electric shock 28
7.5 Emergency stop triggered by safety interlock 28
7.6 Overload protection 28
7.7 Parallel reset 29
7.8 Remote reset 29
7.9 Behaviour in the event of flame failure 29
7.10 Wiring 30
7.11 Note on EC type-examination 30
7.12 Installation of solenoid valves for gas 30
7.13 Flame control 31
7.13.1 With ionization sensor 31
7.13.2 With UV sensor UVS 31
7.14 Flame signal switch-off threshold 31
7.15 Commissioning 31
7.16 Two-stage burner control with two solenoid valves 32
7.17 Short-circuit fuse 33
8 Accessories 34
8.1 High-voltage cable 34
8.2 Radio interference suppressed electrode adapters 34
9 Technical data 35

9.1 Operating controls....36
9.2 Installation....37
10 Maintenance cycles 38
11 Legend 38
12 Glossary 39
12.1 Waiting time t_W 39
12.2 Safety time on start-up t_{SA} 39
12.3 Ignition time t_Z 39
12.4 Flame simulation/Flame simulation delay time t_{LV} 40
12.5 Safety time during operation t_{SB} 40
12.6 Flame signal 40
12.7 Flame detector.... 40
12.8 Fault lock-out.... 40
12.9 Safety interlocks (Limits)....41
12.10 Gas valve V1....41
12.11 Continuous operation....41
Feedback....42
Contact....42



IFD 258

1 Application

Automatic burner control unit IFD 258 ignites and monitors directly ignited industrial gas burners of unlimited capacity. As a result of its fully electronic design it reacts quickly to various process requirements and is therefore also suitable for frequent cycling operation.

It can be used for atmospheric burners or forced draught burners in multiple burner applications, where a central control system is used for pre-purge and for monitoring. The burners may be modulating or stage-controlled. The automatic burner control is suitable for operation in grounded and ungrounded systems.

The program status and the level of the flame signal can be read directly from the unit. The switch-off threshold can be set using a potentiometer.

The behaviour in the event of flame failure during operation can be selected using a switch. Either an immediate fault lock-out or a restart occurs.

1.1 Examples of application



Intermittent shuttle kiln in the ceramics industry



Roller hearth kiln

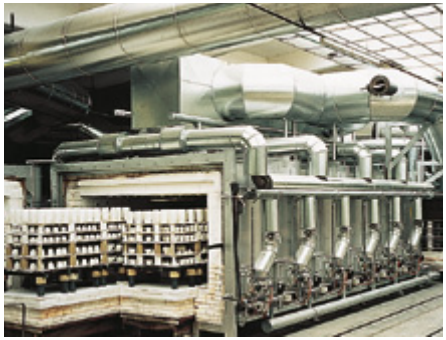

Bogie hearth furnace

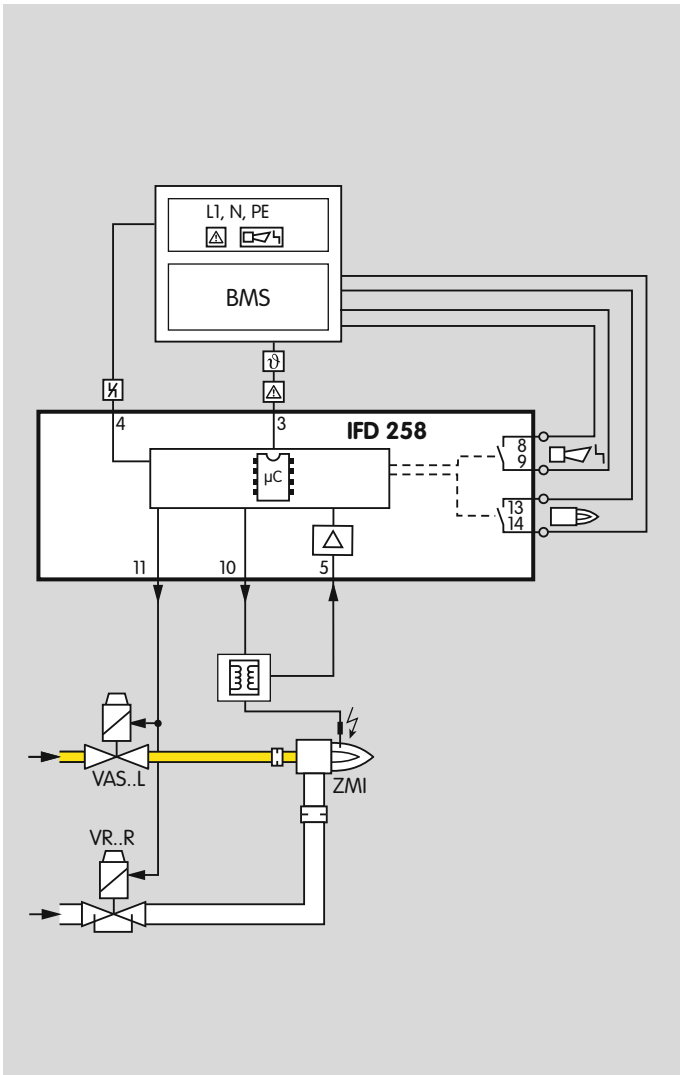

1.1.1 Forced draught burners

Control: ON/OFF

Gas valve and air valve are activated simultaneously. The burner is ignited and monitored by a single electrode. In the event of a flame failure, an immediate fault lock-out occurs.

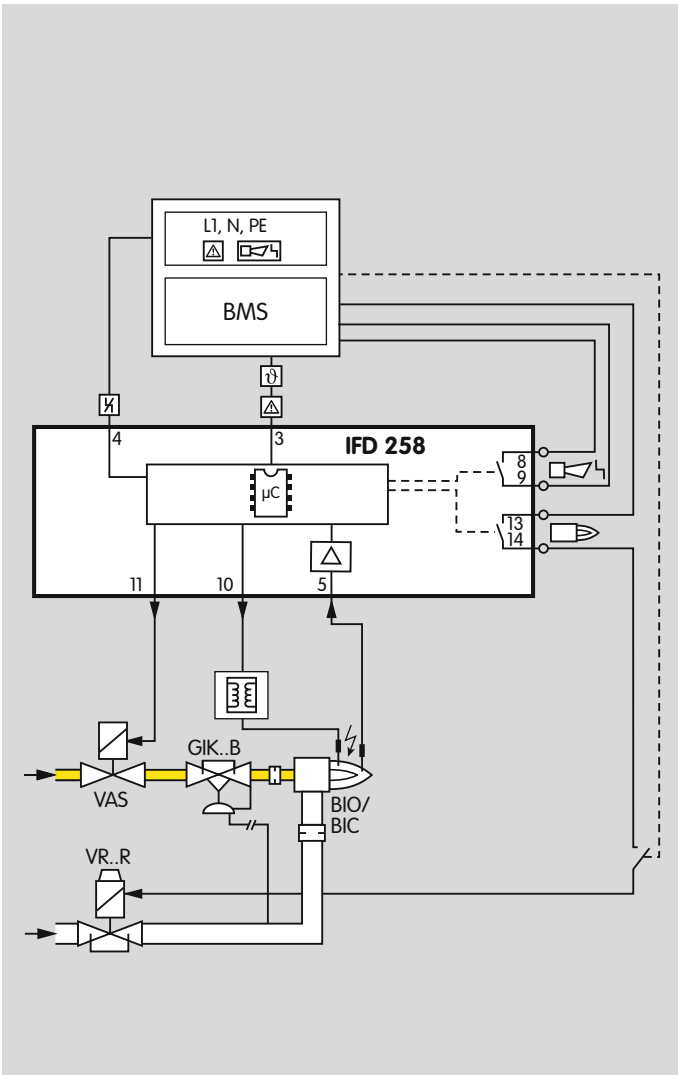

1.1.2 Two-stage-controlled burner

Control: ON/OFF or ON/HIGH/LOW/OFF

The burner BIO/BIC starts at low-fire rate. Once the normal operating state is reached, the automatic burner control unit for continuous operation IFD 258 will release control.

The PLC can now pulse the air solenoid valve VR..R in order to control the capacity between high and low fire.

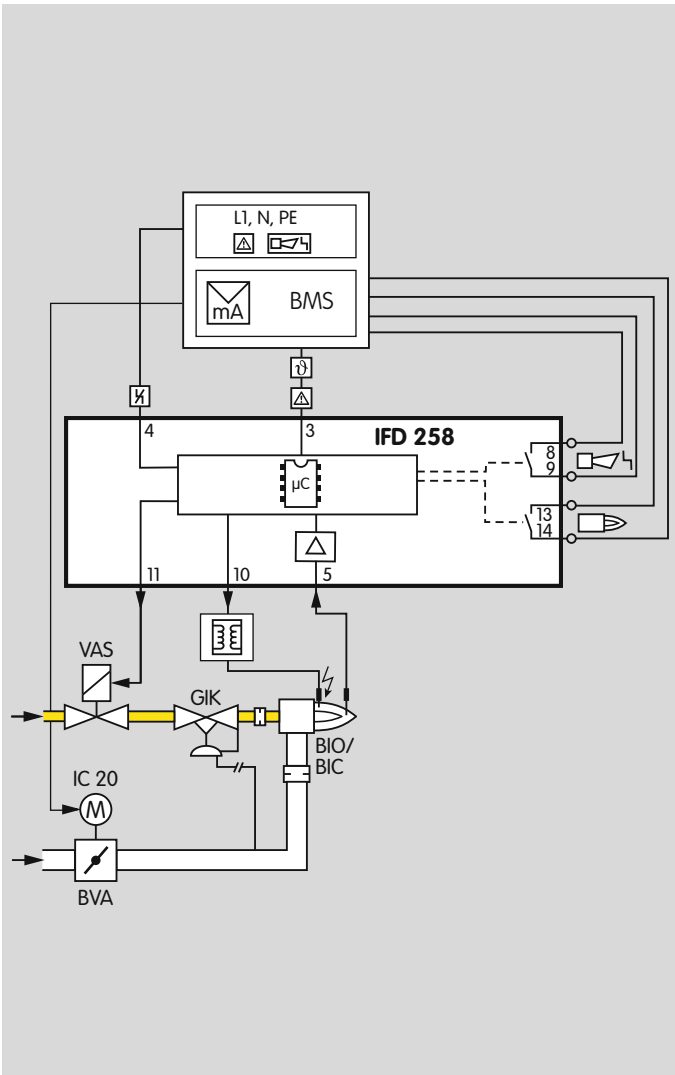

1.1.3 Modulating-controlled burner

Control: ON/OFF/continuous

The PLC uses the actuator IC 20 to move the air butterfly valve BVA to ignition position.

The burner BIO/BIC starts at low-fire rate. Once the normal operating state is reached, the PLC uses the actuator IC 20 and the air butterfly valve BVA to control the burner capacity.

2 Certification

The automatic burner control unit IFD 258 is designed for applications pursuant to the Machinery Directive (2006/42/EC).

2.1 EC type-tested and certified

CE

pursuant to

- Gas Appliances Directive (90/396/EEC) in conjunction with EN 298
- Low Voltage Directive (2006/95/EC)
- Electromagnetic Compatibility Directive (2004/108/EC)

2.2 AGA approval



Australian Gas Association, Approval No.: 4230

http://www.aga.asn.au/product_directory

2.3 FM approval



Factory Mutual Research Class: 7610 “Combustion Safeguards and Flame Sensing Systems”.

Suitable for applications pursuant to NFPA 86.

www.fmglobal.com ➔ Products and Services ➔ Product Certification ➔ Approval Guide

2.4 CSA approval



Certified to CAN/CSA – C 22.2 No. 199-M 89 (R 2004), Canadian Standards Association Class: 3335-01 and 3335-81 “Systems (Gas)-Automatic Ignition and Components”

http://directories.csa-international.org

2.5 Approval for Russia

Certified by Gosstandart pursuant to GOST-R.

Approved by Rostekhnadzor (RTN).

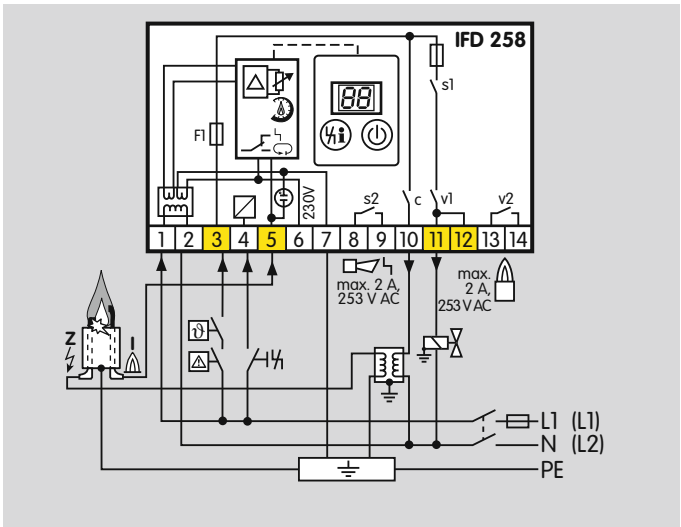

3 Function

3.1 Connection diagrams

For the explanation of symbols, see page 38 (Legend).

For cable selection and wiring, see page 27 (Project planning information).

3.1.1 IFD 258

Ionization control in double-electrode operation

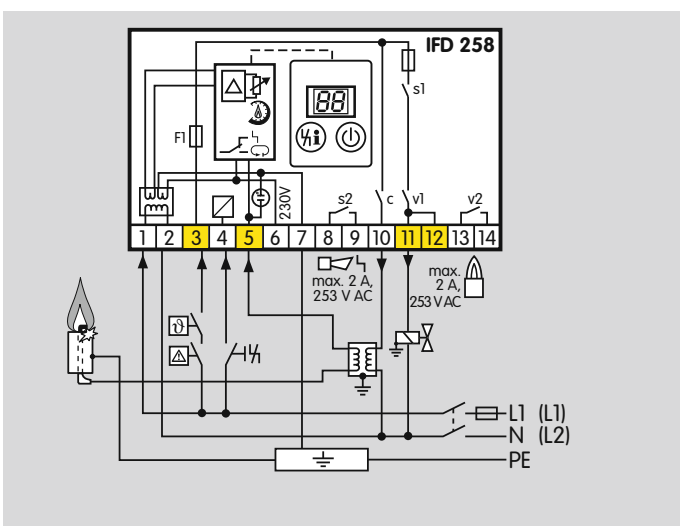

Ionization control in single-electrode operation

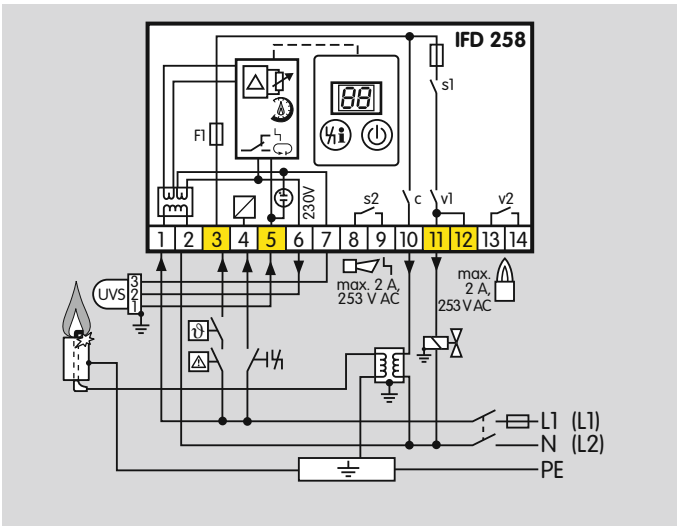

UV control

In the case of UV control, only intermittent operation is possible.

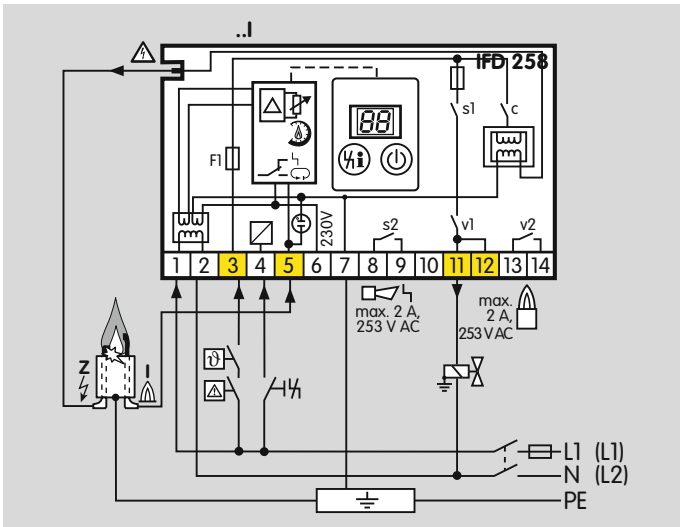

3.1.2 IFD 258..I

The IFD 258..I is suitable for double-electrode operation and for UV control. Single-electrode operation is not possible.

Ionization control in double-electrode operation

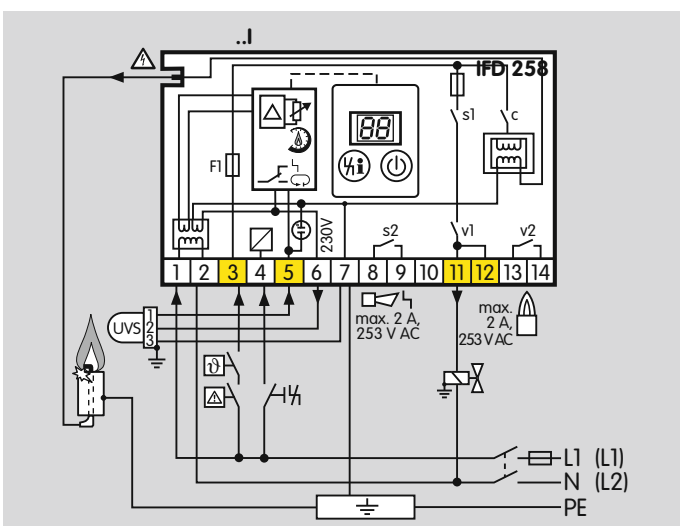

UV control

In the case of UV control, only intermittent operation is possible.

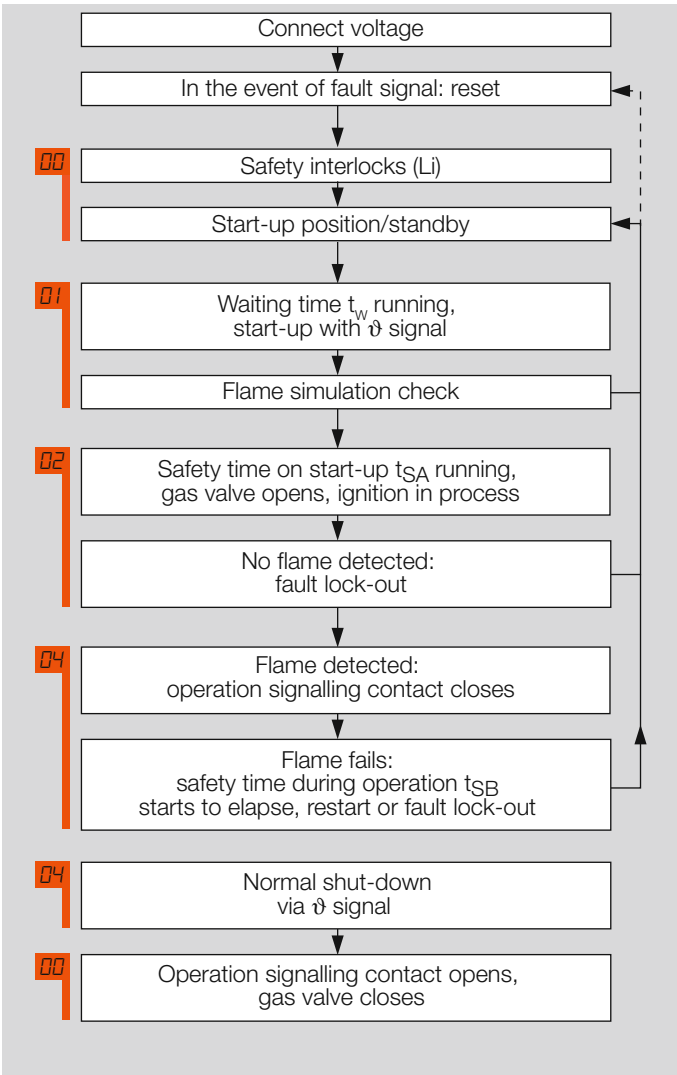

3.2 Program sequence

Normal start-up

If, after applying voltage, an “old” fault is still being signalled, it will be necessary to reset this first. The safety interlocks are closed, the IFD reverts to start-up position/standby and conducts a self-test.

If it does not determine a malfunction of the internal electronic circuitry or of the flame sensor, the flame simulation check then commences. This takes place in start-up position during the waiting time t_W.

If no flame simulation is detected during that period, the safety time on start-up t_{SA} then starts to elapse. Voltage is supplied to the gas valve and ignition transformer. The burner starts. After the safety time on start-up t_{SA} has elapsed, the operation signalling contact closes. This completes start-up.

Start-up without flame signal

If, after the gas valve has opened and the ignition has been activated, no flame is detected during the safety time on start-up t_{SA}, a fault lock-out will then occur.

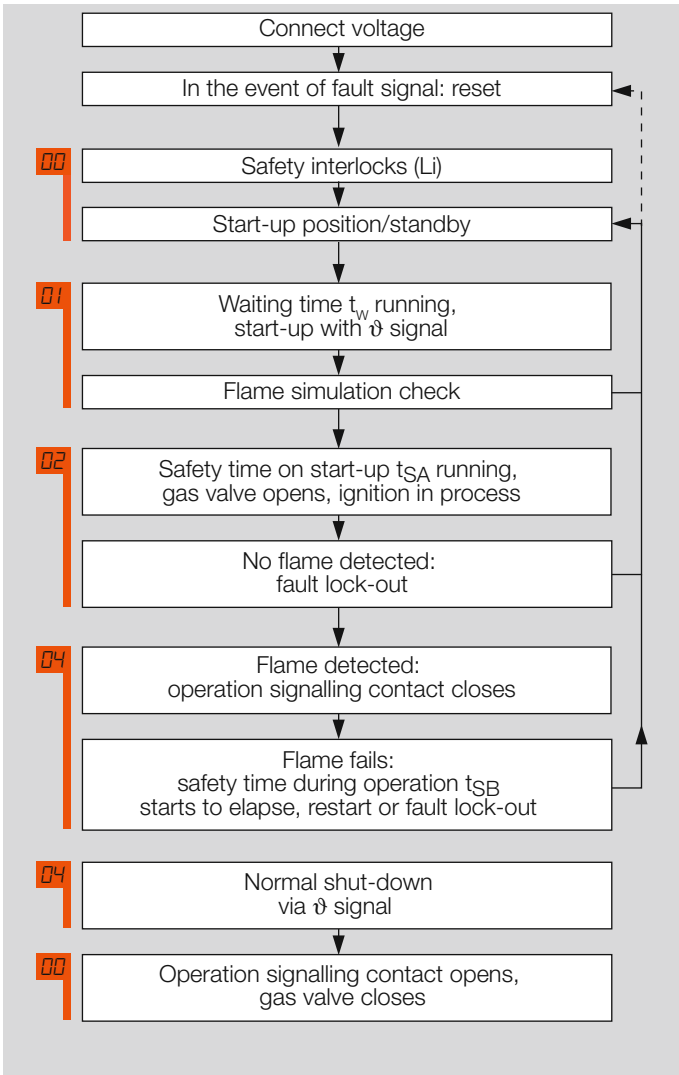

Behaviour in the event of flame failure during operation

If the flame fails during operation, the IFD 258 will perform a fault lock-out within the safety time during operation t_{SB}. Depending on the setting of the program selector switch, the valves will be closed immediately or the burner will be restarted once. If the burner does not function, a fault lock-out occurs.

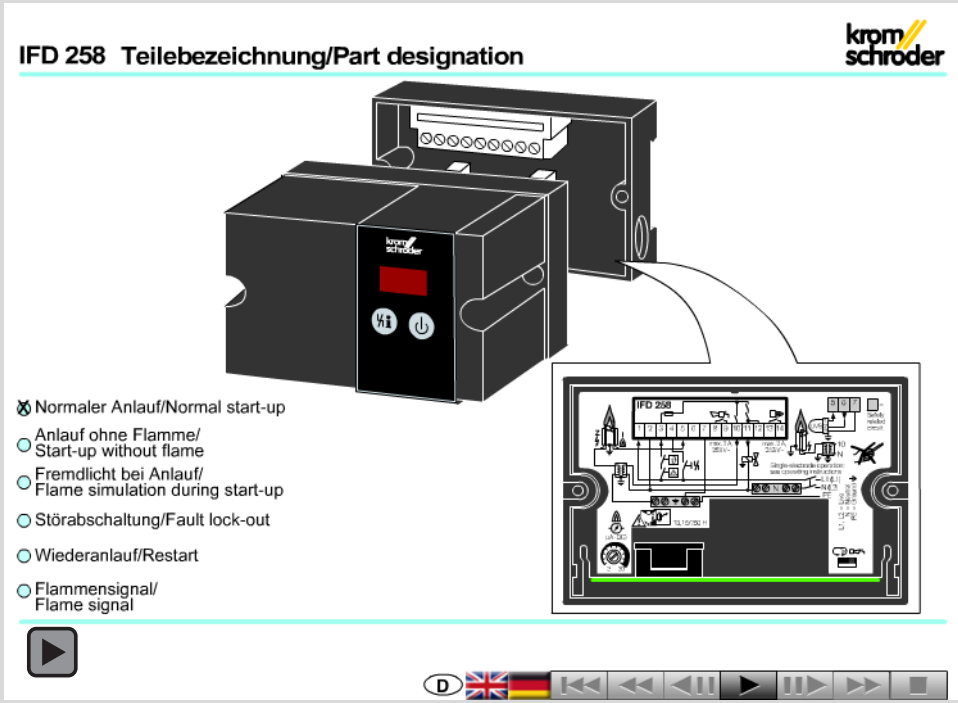

3.3 Animation

The interactive animation shows the function of the automatic burner control unit IFD.

Click on the picture. The animation can be controlled using the control bar at the bottom of the window (as on a DVD player).

To play the animation, you will need Adobe Reader 9 or a newer version. If you do not have Adobe Reader on your system, you can download it from the Internet.

If the animation does not start to play, you can download it from the document library www.docuthek.com as an independent application.

3.4 Program status and fault messages

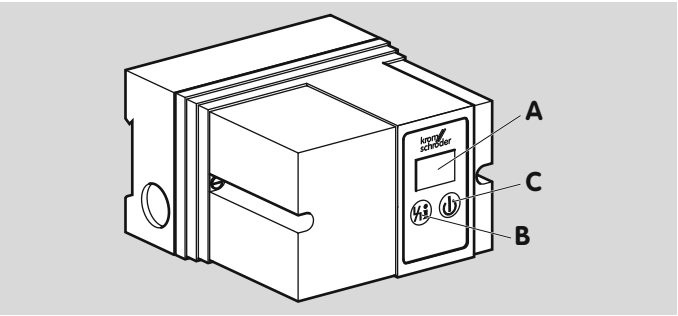

Operating controls

A: 2-digit 7-segment display for indicating program status and flame signal.

B: Reset/Information button to reset the system after a fault or to call up the flame signal on the display.

C: Mains On/Off button.

The 7-segment display (**A**) shows the program status. In the event of a fault, the IFD halts the program run and the display starts to blink. The program status and cause of the fault are displayed in coded form.

Program status	DISPLAY	Fault message (blinking)
Unit can be switched off	--	
Start-up position/standby	00	
Waiting time/Pause time	01	Flame simulation
Safety time on start-up tSA	02	Start-up without flame signal
Operation	04	Flame failure during operation
	09	Oscillating thermostat signal
	10	Too many remote resets
	52	Permanent remote reset
	53	Time between two start-ups is too short

3.4.1 Reading off the flame signal

Internally:

The flame signal can be called up on the display by pressing the Reset/Information button (for 2 seconds). The flame signal of the burner is indicated in µA. A value between 0 and 25 µA is displayed.

Important!

When using an external µ-ammeter, you must make sure that this µ-ammeter cannot simulate any flame signal.

4 Parameters

Description	Parameter	Value range	Factory default settings	Adjustable*
Burner flame signal	01	0 – 25 µA		
Burner switch-off threshold	04	2 – 20 µA	2 µA	● 1)
Burner restart	12	0; 1	0	● 2)
Safety time during operation for V1 and V2 t_{SB}	14	1; 2 s 3)		
Burner safety time on start-up t_{SA}	22	3; 5; 10 s 3)		
Last fault	81			
Second to last occurring fault	82			
Third to last occurring fault	83			
	...			
Tenth to last occurring fault	90			

1) Via potentiometer in lower section of housing.
2) Via switch in lower section of housing.
3) Quote in your order.

On parameterization, ensure that the program sequence matches the application. Select the parameters so that the burner can be operated as intended in all operating phases.

4.1 Scanning the parameters

During operation, the 7-segment display shows the program status, see page 16 (Program status and fault messages).

The flame signal and all following parameters of the IFD can be scanned one after the other by repeatedly pressing the Reset/Information button (for 2 s).

In the event of a fault, the IFD halts the program run, the display blinks and it then displays the cause of the fault in coded form.

4.2 Flame control

4.2.1 Burner flame signal

Parameter 01

Flame signal of the burner, display in µA, measuring range: 0 – 25 µA.

4.2.2 Switch-off threshold of the flame amplifier

Parameter 04

The sensitivity at which the burner control unit still detects a flame can be set between 2 and 20 µA.

Example: In the case of UV control with the UV sensor UVS, the signal of the burner to be monitored is influenced by other burners.

The set value can be increased via a potentiometer in the lower section of the housing so that only the flame of the system's "own" burner is detected.

The measured flame signal of the system's "own" burner should be at least 3 µA (empirical value) higher than the set switch-off threshold.

4.3 Behaviour during start-up

4.3.1 Normal start-up

The safety time t_{SA} can be read on the type label (parameter 22).

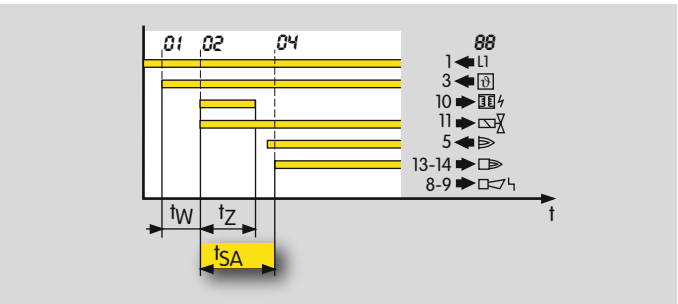

Once the start-up signal (ϑ) has been applied, the automatic burner control unit checks the burner for flame simulation during the waiting time t_W. If no flame simulation is detected during that period, the safety time on start-up t_{SA} (3, 5 or 10 s) then starts to elapse. This forms the minimum operating time of the automatic burner control unit and the burner. Voltage is supplied to the gas valve and ignition transformer. After the safety time on start-up t_{SA} has elapsed and the flame signal has been received, the operation signalling contact between terminals 13 and 14 closes. The display indicates the current program status 04.

4.3.2 Start-up without flame signal

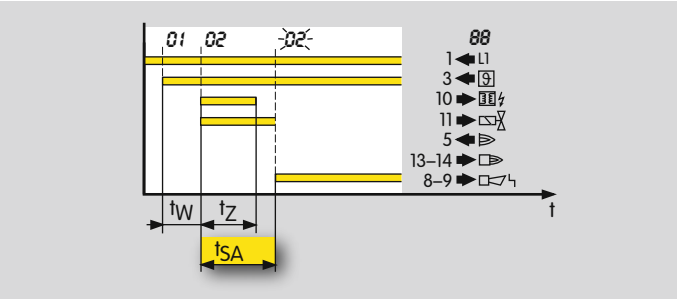

If, after a successful burner start, the automatic burner control unit does not detect a flame signal during the safety time on start-up t_{SA}, a fault lock-out will occur (fault signalling contact between terminals 8 and 9 closes). During the entire safety time on start-up t_{SA}, the gas valve V1 is open. The display blinks and indicates 02.

4.3.3 Flame simulation

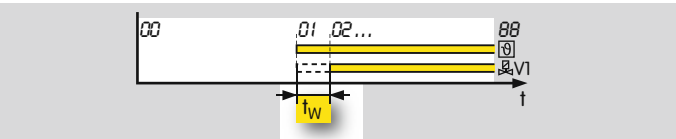

The flame simulation check is conducted after applying the start-up signal (ϑ) during the waiting time t_W.

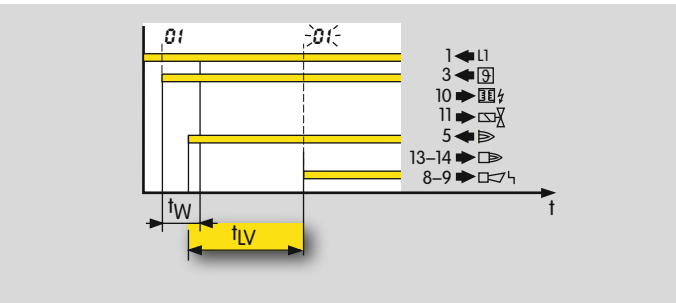

If flame simulation is signalled during start-up, the flame simulation delay time t_{LV} starts to elapse. If the flame simulation is discontinued during the flame simulation delay time t_{LV} (max. 25 s), the burner will start up. Otherwise, a fault lock-out occurs. The display blinks and indicates 01.

Start-up signal, safety interlock

The start-up signal is the same as the signal in the safety interlock.

If the start-up/safety interlock signal drops more than four times in succession during start-up, an inadmissible quantity of non-combusted gas can reach the combustion chamber during the safety time via open gas valves. Therefore, a fault lock-out is performed on the automatic burner control unit IFD 258 following three consecutive drops of the start-up/safety interlock signal (blinking 09).

4.4 Behaviour during operation

4.4.1 Safety time during operation t_{SB} for V1 and V2

Parameter 14

This indicates the safety time during operation t_{SB} for valves V1 and V2. The default in accordance with EN 298 is 1 s. The IFD is also available with a safety time during operation t_{SB} of 2 s. Prolonging the time increases the installation availability in the case of brief-duration signal fades (e.g. fades of the flame signal). In accordance with EN 746-2, the safety time of the installation during operation (including closing time of the valves) may not exceed 3 seconds (note the requirements of the Standards).

4.4.2 Fault lock-out or restart

Parameter 12

A switch on the underside of the upper section of the housing determines whether the IFD starts a one-off restart or performs an immediate fault lock-out for the burner after a flame failure, see page 29 (Behaviour in the event of flame failure).

Immediate fault lock-out following flame failure

Parameter 12 = 0,
Switch in fault lock-out position ↳:

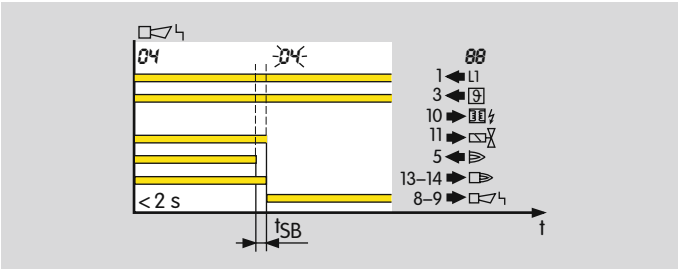

After a flame failure during operation, the IFD 258 will perform a fault lock-out within the safety time during operation t_{SB} (the safety time during operation t_{SB} is 1 second. The IFD 258 is available with a safety time of 2 seconds upon request). At the same time, the gas valve is closed. The fault signalling contact closes and the display blinks and indicates 04, see page 16 (Program status and fault messages).

After a fault lock-out, the IFD 258 can be reset, either by using the button on the front panel or an external button. Several automatic burner control units can be reset in parallel using the external button. The IFD 258 cannot be reset by mains failure. The fault signalling contact does, however, open as soon as the mains voltage fails.

Restart following flame failure

Parameter 12 = 1,

Switch in restart position ↻:

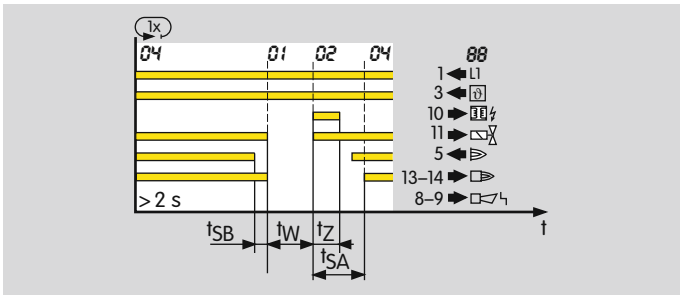

If the IFD detects a flame failure after a minimum operating time of 2 s, the valves are closed and the operation signalling contact (terminals 13 and 14) is opened within time t_{SB}.

The automatic burner control unit now attempts to restart the burner once. If the burner does not function, a fault lock-out occurs. The display blinks and indicates 02.

If, on restart, the automatic burner control unit detects a flame signal within the safety time on start-up t_{SA}, the operation signalling contact closes. The display indicates the current program status 04.

In accordance with EN 746-2, a restart may be conducted only if the safety of the installation is not impaired. Restart is recommended for burners which occasionally display unstable behaviour during operation.

The precondition for a restart is that activation of the restart allows the burner to restart as intended (in all operating phases). It must be ensured in this case that the program sequence started by the IFD matches the application.

5 Replacement possibilities

The new automatic burner control unit IFD 258 is interchangeable with the IFS 258 and provides almost all of the previous functions of the IFS 258.

The housing dimensions and hole pattern are unchanged.

The new upper section of the housing will fit on the existing lower section (for further information see operating instructions “Automatic burner control unit for continuous operation IFD 258”).

IFS 258	IFD 258
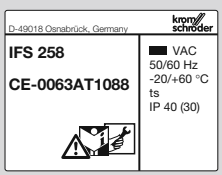	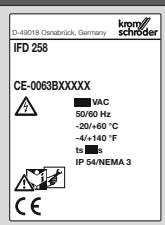
	
Signalling contact for fault and operating signals	Signalling contact for fault and operating signals
Flame signal called up via test jacks in upper section of housing using external measuring instrument	The flame signal can be called up on the 2-digit 7-segment display.
Complies with requirements in accordance with EN 1993	Complies with requirements in accordance with EN 2003
Fault signal with no mains voltage supplied	Fault signal with mains voltage supplied
Flame simulation indicated by yellow LED	Flame simulation indicated on 7-segment display = 01
Operation indicated by yellow and green LEDs	Operation indicated on 7-segment display = 04
Mains voltage = 100, 115, 200, 230 V	Mains voltage = 100, 120, 200, 230 V
No protection against frequent remote resets	Protection against frequent remote resets (blinking 10)
No protection against frequent switch-off during t_{SA}	Protection against frequent switch-off during t_{SA} (blinking 09)

6 Selection

6.4.1 Calculating the safety time t_{SA}

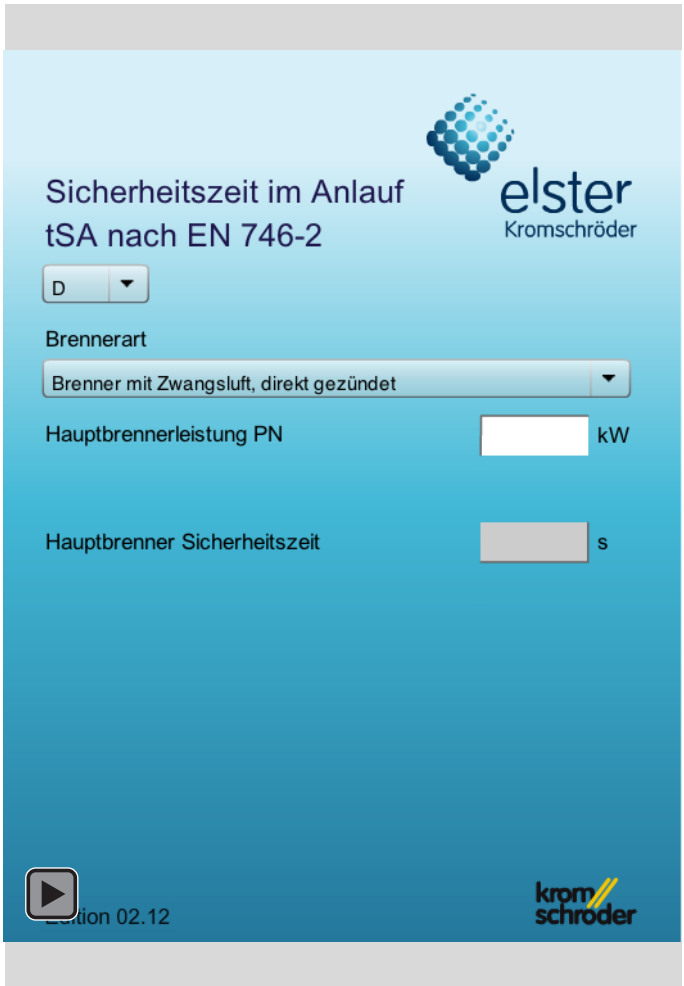

6.1 Selection table

	2	5	8	-3	-5	-10	/1	/2	Y	Q	P	W	I*
IFD	●	●	●	●	●	●	●	●	●	●	●	●	○

** Only available for IFD 258..Q and IFD 258..W.*
● = standard, ○ = available

Order example
IFD 258-5/1W

6.1.1 Type code

Code	Description
IFD	Automatic burner control unit
2	Series 200
5	With ionization or UV control
8	Immediate fault lock-out or restart, switchable
-3	Safety time on start-up t_{SA}: 3 s
-5	5 s
-10	10 s
/1	Safety time during operation t_{SB}: 1 s
/2	2 s
W	Mains voltage: 230 V AC, 50/60 Hz
Q	120 V AC, 50/60 Hz
Y	200 V AC, 50/60 Hz
P	100 V AC, 50/60 Hz
I*	Integrated electronic ignition

** If "none", this specification is omitted.*

7 Project planning information

7.1 Cable selection

Use mains cable suitable for the type of operation and complying with local regulations.

Signal and control line: max. 2.5 mm^2.

Cable for burner ground/PE wire: 4 mm^2.

Do not route IFD cables in the same cable duct as frequency converter cables or other cables emitting strong fields.

Ionization cable and ignition cable

Use unscreened high-voltage cable for both lines, see page
34 (Accessories).

Recommended cable length:
Ionization cable – max. 75 m,
Ignition cable:
IFD 258: max. 5 m, recommended < 1 m (with TZI/TGI),
IFD 258..I: max. 1 m, recommended < 0.7 m.
The longer the ignition cable, the lower the ignition capacity.

Avoid external electrical interference.

Lay cables individually and not in a metal conduit, if possible.

Lay the ignition cable and UV cable/ionization cable as far apart as possible.

Screw the ignition cable securely into the ignition transformer TGI/TZI and feed it out of the unit on the shortest possible route (no loops).

Only use radio interference suppressed electrode adapters (with 1 kΩ resistor) for ignition electrodes, see page 34 (Accessories).

UV cable

The UV cable should be no longer than 100 m and should be laid as far as possible from the ignition cable.

7.2 Star electrodes

We recommend using 7.5 kV ignition transformers on burners with star electrodes.

7.3 Purge

In the case of multiple burner applications, burners with forced air supply are used. The air for combustion and pre-purge is supplied by a central fan controlled by a separate logic. This logic determines the purging time and controls an external relay that switches the air valve to purge.

The automatic burner control unit must not be activated during purging. This is achieved by interrupting the safety interlock, amongst other methods.

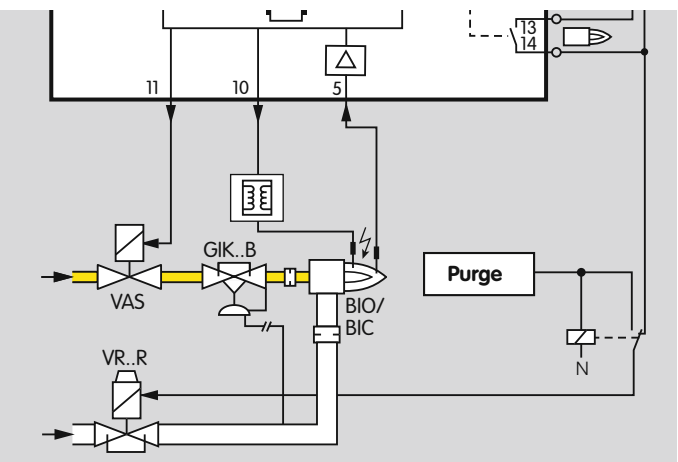

7.4 Emergency stop in the event of fire or electric shock

If there is a risk of fire, electric shock or similar, inputs L1, N and 3 (start-up/safety interlock signal) of the IFD should be disconnected from the electrical power supply.

Important! This should be reflected in the wiring on site!

7.5 Emergency stop triggered by safety interlock

The safety interlock turns off the power to the input 3 (start-up/safety interlock signal), such as in the event of air deficiency or similar.

7.6 Overload protection

To protect the unit against overload by frequent cycling, only a specific number of start-up attempts can be carried out by the IFD. The maximum number of start-up attempts per minute depends on the safety time t_{SA} and the ignition unit.

t_{SA} [s]	t_Z [s]	Type of ignition	Cycle lock [s]
3	1.8	External TZI	10
5	3	External TZI	12
10	6	External TZI	15
3	1.8	IFD..I	36
5	3	IFD..I	60
10	6	IFD..I	120

If too many start-up attempts are made, 53 flashes on the display to indicate a fault.

7.7 Parallel reset

Several automatic burner control units can be reset in parallel using the external button. The IFD 258 cannot be reset by mains failure. The fault signalling contact does, however, open as soon as the mains voltage fails.

7.8 Remote reset

Permanent

The unit can no longer be reset by permanent remote reset: if a remote reset signal is permanently applied to terminal 4, 52 flashes on the display as a warning signal. The IFD continues operation until it locks off.

Automatic (PLC)

Check whether automatic remote reset (PLC) complies with standards (reset for no longer than 1 second).

If a fault is acknowledged by remote reset too often, 10 flashes on the display to indicate a fault (too many remote resets). The error can only be acknowledged with the Reset/Information button on the unit.

The burner malfunction must be remedied. The malfunction cannot be remedied by changing the method of activation.

7.9 Behaviour in the event of flame failure

In the event of a flame failure, either a restart or an immediate fault lock-out can be selected using a switch in the upper section of the automatic burner control unit IFD 258.

Restart

Select for burners that occasionally demonstrate unstable flame behaviour.

Immediate fault lock-out

Select an immediate fault lock-out when using the unit with slow-closing air control valves or continuous control, if the burner may not be started at maximum capacity, for burners with a capacity of over 120 kW in accordance with EN 676 and in the case of On/Off intermittent operation.

7.10 Wiring

The IFD is suitable for hard wiring only. Do not reverse phase and neutral conductor. Different phases of a three-phase current system must not be installed at the IFD.

No voltage may be connected to the valve and ignition outputs.

Do not use unused terminals as support terminals.

The signalling contacts for operating and fault signals do not meet the requirements for safety extra low voltage (SELV/PELV).

The burner should be adequately grounded. Incorrect wiring and an insufficient ground connection can cause damage to the equipment during single-electrode operation.

In the case of single-electrode operation, only ignition transformers of type TZI or TGI may be used. The use of pulse-spark or high-frequency ignition devices is not permitted.

7.11 Note on EC type-examination

Since EN 298 (1993) does not describe all functions of the IFD, the operator is responsible for ensuring that all parameters and functions are matched to the respective application.

7.12 Installation of solenoid valves for gas

During the safety time on start-up t_{SA}, the burner must be supplied with gas and ignited. For this reason, the gas solenoid valve should be installed as close as possible to the burner itself.

7.13 Flame control

7.13.1 With ionization sensor

The IFD generates an alternating voltage (230 V AC) between the sensing electrode and burner ground. The flame rectifies this voltage. Only the DC signal (> 2 µA) is recognized by the automatic burner control unit as a flame.

A flame cannot be simulated by a short-circuit.

Ignition and monitoring with a single electrode are possible, see page 10 (Connection diagrams).

7.13.2 With UV sensor UVS

A UV tube inside the UV sensor detects the ultraviolet light of a flame. It does not respond to sunlight, incandescent bulb light or infrared radiation emitted by hot workpieces or red-hot furnace walls.

In the event of incident UV radiation, the UV sensor rectifies the supplied alternating voltage. As with ionization control, the automatic burner control unit only detects this DC signal.

In the case of flame control with the UV sensor UVS, only intermittent operation is allowed (a flame simulation check must be carried out once every 24 hours).

7.14 Flame signal switch-off threshold

The switch-off threshold can be set between 2 and 20 µA using a potentiometer in the upper section of the housing. The automatic burner control unit IFD is set to 2 µA at the factory.

If a flame is detected during the burner start, 01 flashes on the display to indicate a fault.

7.15 Commissioning

The IFD retains its switch position (On/Off) when the voltage is removed from terminal 1.

7.16 Two-stage burner control with two solenoid valves

The IFD is equipped with two signalling contacts for operating and fault signals. For controlling two-stage burners, a bridge must be installed in the lower section of the housing between terminals 12 and 13. Valve V2 is connected to terminal 14.

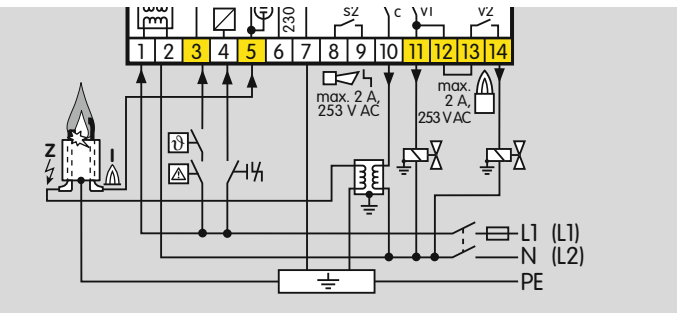

Program sequence

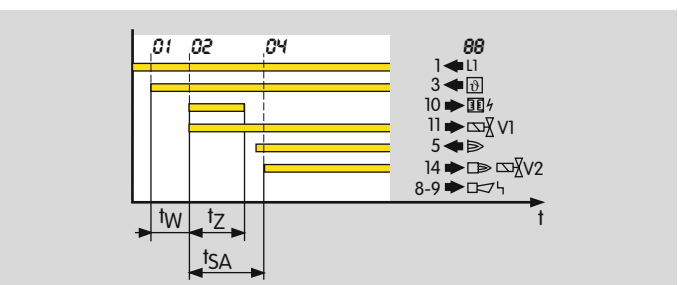

During the waiting time t_W after heat demand, checks are made for flame simulation and fail-safe operation. If no flame simulation is detected, the IFD 258 opens the gas valve V1 and ignites the burner. The ignition time t_Z is constant. The safety time t_{SA} starts with the ignition time t_Z. If a flame is detected during the safety time, the operation signalling contact closes and valve 2 is opened once the safety time t_{SA} has elapsed.
If no flame is detected, the fault signalling contact closes once the safety time t_{SA} has elapsed.

Example of application

Control: ON/OFF or ON/HIGH/LOW/OFF

The burner BIO/BIC starts at low-fire rate. Once the normal operating state is reached, the automatic burner control unit IFD 258 opens the air valve. The burner switches to high-fire operation.

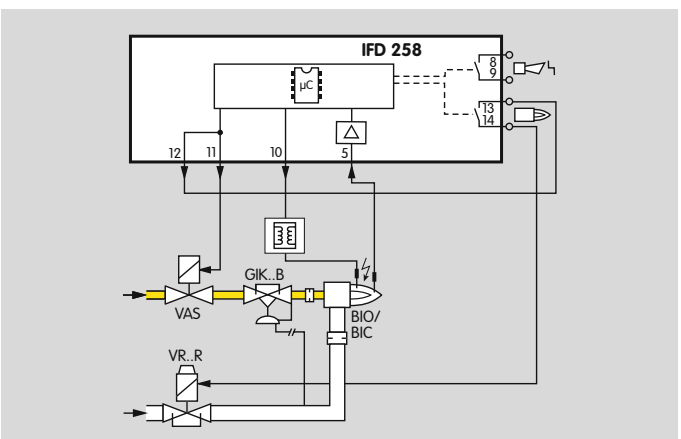

7.17 Short-circuit fuse

In accordance with EN 298, all safety outputs for gas valves are fitted with an internal fuse, which may no longer be replaced. In the event that the internal fuse blows, the unit must be sent to the manufacturer for inspection.

8 Accessories

8.1 High-voltage cable

FZLSi 1/7 -50°C (-58°F) to 180°C (356°F),
Order No.: 04250410,

FZLK 1/7 -5°C (23°F) to 80°C (176°F),
Order No.: 04250409.

8.2 Radio interference suppressed electrode adapters

Plug cap, 4 mm (0.16 inch), interference-suppressed,
Order No. 04115308.

Straight adapter, 4 mm (0.16 inch), interference-suppressed,
Order No. 04115307.

Straight adapter, 6 mm (0.2 inch), interference-suppressed,
Order No. 04115306.

9 Technical data

Mains voltage for grounded and ungrounded mains:
200 V AC, -15/+10%, 50/60 Hz,
120 V AC, -15/+10%, 50/60 Hz,
100 V AC, -15/+10%, 50/60 Hz,
230 V AC, -15/+10%, 50/60 Hz.

Safety time on start-up t_{SA}: 3, 5 or 10 s.

Safety time during operation t_{SB}: < 1 s, < 2 s.

Ignition time t_Z: approx. 2, 3 or 6 s.

Power consumption:
IFD 258: approx. 9 VA,
IFD 258..I: approx. 9 VA + 25 VA during ignition.

Output voltage for valves and ignition transformer = mains voltage.

Contact rating:
ignition output: max. 2 A, cos φ = 0.2,
valve output: max. 1 A, cos φ = 1,
signalling contacts: max. 2 A, 253 V AC,
max. number of operating cycles: 250,000.

Max. number of operating cycles:
reset button: 1000,
mains button: 1000.

Signal inputs:

Input voltage	100/120 V AC	200/230 V AC
Signal "1"	80 – 132 V	160 – 253 V
Signal "0"	0 – 20 V	0 – 40 V
Frequency	50/60 Hz	

Input current signal inputs: signal "1": typ. 2 mA.

Flame control:
sensor voltage: approx. 230 V AC,
length of sensor cable:
max. 75 m for ionization control,
max. 100 m for UV control,
sensor current: > 2 µA,
switch-off threshold can be adjusted between 2 and 20 µA,
max. sensor current for ionization control < 25 µA.

Permissible UV sensors:
Elster Kromschröder models UVS 1, 5, 6 and 10 for ambient temperatures from -40 to +80°C (-40 to 176°F).

Valve connections: 1.

IFD 258..I: ignition voltage: 22 kVpp,
ignition current: 25 mA,
spark gap: ≤ 2 mm.

Ignition cable:
IFD 258: max. 5 m, recommended < 1 m (with TZI/TGI),
IFD 258..I: max. 1 m, recommended < 0.7 m.

Fuse in unit: F1: T 3.15A H 250 V pursuant to IEC 127-2/5.

Ambient temperature: -20 to +60°C (-4 to +140°F).

Relative humidity: no condensation permitted.

Enclosure: IP 54 pursuant to IEC 529.

Overvoltage category III pursuant to EN 60730.

Cable gland: M16.

Installation position: any.

Weight:
IFD 258: 610 g,
IFD 258..I: 770 g.

9.1 Operating controls

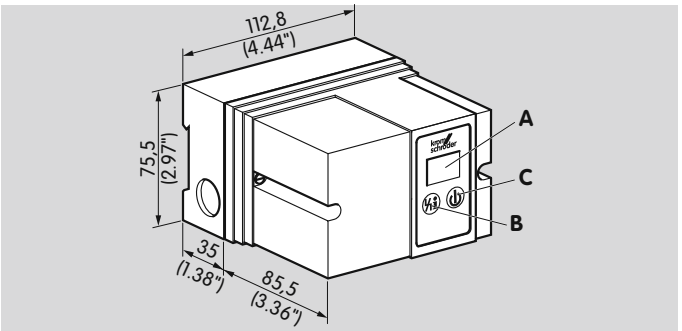

A: 2-digit 7-segment display to display program status and flame signal.

B: Reset/Information button to reset the system after a fault or to call up the flame signal on the display.

C: Mains On/Off button.



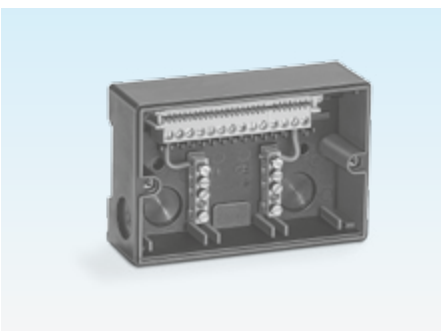

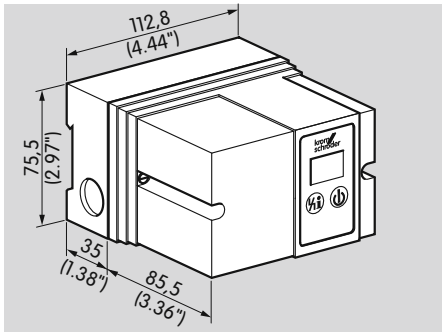

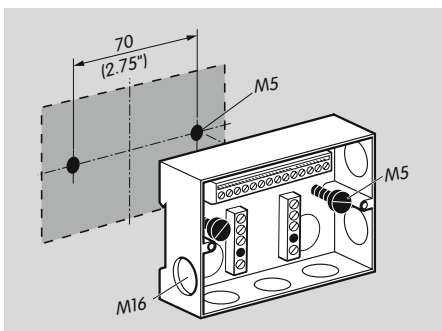

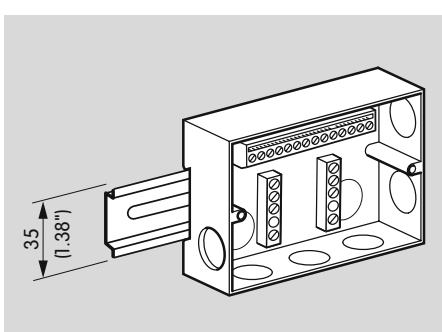

9.2 Installation

The unit can be installed in any position. The installation position should however be selected carefully in order to ensure that the display can easily be read.

The housing is made of impact-resistant plastic. The upper section containing the detection circuitry is a push connection fit into the lower section. The connection terminals, grounding strip and neutral bus are located in the lower section. The upper section of the housing is attached to the lower section using two screws.

The lower section can either be snapped onto a DIN rail or secured with two M5 screws. In order to obtain enclosure IP 54, two sealing washers must be placed beneath the M5 screws.

The housing has 6 knock-out holes for M16 plastic cable glands.

.

10 Maintenance cycles

The automatic burner control unit IFD 258 requires little servicing.

11 Legend

Symbol	Description
88	Display
88	Blinking display
	Safety interlocks (Limits)
	Start-up signal
	Ignition transformer
	Gas valve
	Flame signal
	Operating signal/RUN
	Fault signal
i	Reset/Information
	Input signal
	Output signal
Z	Ignition/High voltage
I	ionization
	Input/Output safety circuit
t_W	Waiting time
t_{LV}	Flame simulation delay time
t_Z	Ignition time
t_{SA}	Safety time on start-up (3, 5 or 10 s)
t_{SB}	Safety time during operation (< 1 s or < 2 s)

12 Glossary

12.1 Waiting time t_W

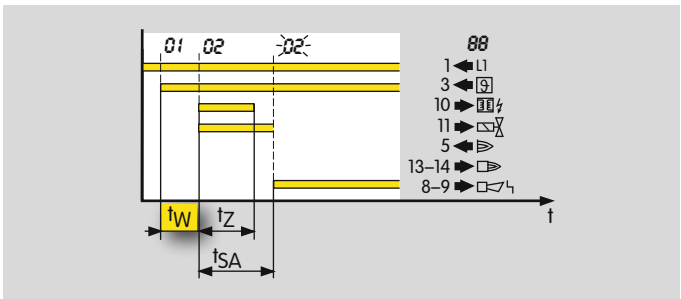

Once the start-up signal ϑ has been applied, the waiting time t_W starts to elapse. During this time, a self-test is conducted to detect errors in internal and external circuit components. If no malfunction is detected, the burner will start up.

12.2 Safety time on start-up t_{SA}

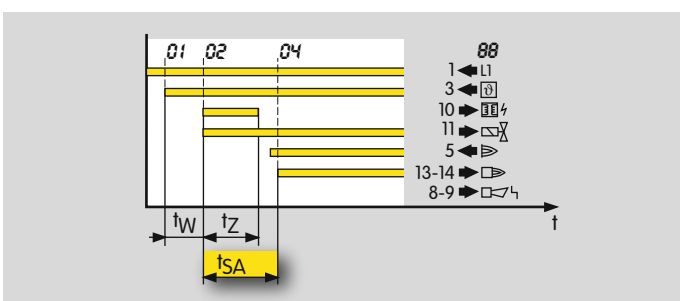

This refers to the period of time between switching on and switching off of the gas valve V1, when no flame signal is detected. The safety time on start-up t_{SA} (3, 5 or 10 s) is the minimum operating time of the burner and automatic burner control unit.

12.3 Ignition time t_Z

If no malfunction is detected during the waiting time t_W, the ignition time t_Z then starts to elapse. Voltage is supplied to the gas valve V1 and the ignition transformer and the burner is ignited. The duration of the ignition time is either 2, 3 or 6 seconds, see page 35 (Technical data).

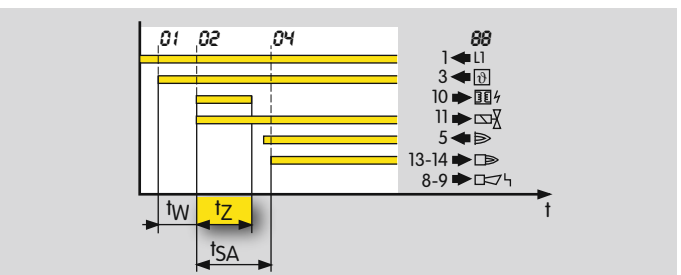

12.4 Flame simulation/Flame simulation delay time t_{LV}

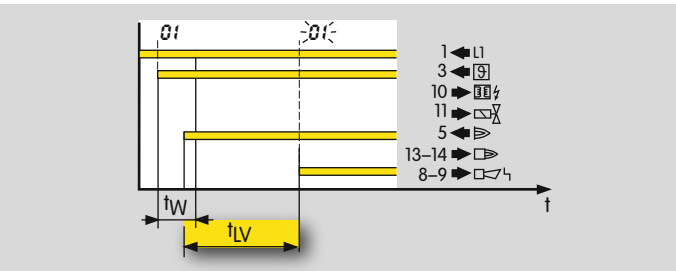

Flame simulation is an incorrect flame signal. If flame simulation is detected, the flame simulation delay time t_{LV} (max. 25 s) starts to elapse. If the flame simulation is discontinued during the flame simulation delay time t_{LV}, start-up can be initiated or operation continued. Otherwise, a fault lock-out occurs.

12.5 Safety time during operation t_{SB}

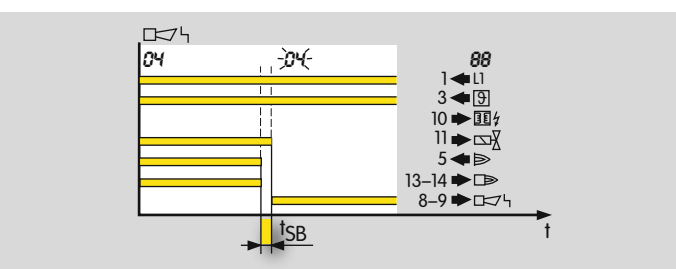

If the flame fails during operation, the valves are closed within the safety time t_{SB}.

The default safety time during operation t_{SB} in accordance with EN 298 is 1 second. In accordance with EN 746-2, the safety time of the installation during operation (including closing time of the valves) may not exceed 3 seconds, see page 27 (Project planning information). Note the requirements of the Standards!

12.6 Flame signal

If a flame is detected, the flame detector will supply a flame signal.

12.7 Flame detector

The flame detector detects and signals the presence of a flame. The flame detector usually consists of a flame sensor, an amplifier and a relay to produce the signal. These components, with the exception of the flame sensor itself, are accommodated within a single housing (IFW 50).

12.8 Fault lock-out

In the event of a fault lock-out, all valves are closed and a fault signalled. Resetting must take place manually following a fault lock-out.

12.9 Safety interlocks (Limits)

The limiters in the safety interlock (linking of all the relevant safety control and switching equipment for the use of the application, for example STB (safety temperature limiter), Gas_{min}, Gas_{max} ...) must isolate input 3 from the voltage supply.

12.10 Gas valve V1

The start fuel flow rate is released by gas valve V1. The gas valve V1 opens at the start of the safety time on start-up t_{SA}. It remains open until the burner is switched off again by a controlled shut-down or fault lock-out.

12.11 Continuous operation

The gas burner has been running for longer than 24 hours and was not switched off during that time.

Feedback

Finally, we are offering you the opportunity to assess this “Technical Information (TI)” and to give us your opinion, so that we can improve our documents further and suit them to your needs.

Clarity

- ○ Found information quickly
- ○ Searched for a long time
- ○ Didn’t find information

  What is missi
- ○ No answer

Comprehension

- ○ Coherent
- ○ Too complicated
- ○ No answer

Scope

- ○ Too little
- ○ Sufficient
- ○ Too wide
- ○ No answer

Use

- ☐ To get to know the product
- ☐ To choose a product
- ☐ Planning
- ☐ To look for information

Navigation

- ○ I can find my way around
- ○ I got “lost”
- ○ No answer

My scope of functions

- ○ Technical department
- ○ Sales
- ○ No answer

Remarks



Contact

Elster GmbH
Postfach 2809 · 49018 Osnabrück
Strotheweg 1 · 49504 Lotte (Büren)
Germany
Tel +49 541 1214-0
Fax +49 541 1214-370
info@kromschroeder.com
www.kromschroeder.com

The current addresses of our international agents are available on the Internet:
www.kromschroeder.de/Weltweit.20.0.html?&L=1

We reserve the right to make technical modifications in the interests of progress.
Copyright © 2016 Elster GmbH
All rights reserved.

03250724